N° 3205 A.D. 1896

Date of Application, 12th Feb., 1896

Complete Specification Left, 16th June, 1896—Accepted, 1st Aug., 1896

PROVISIONAL SPECIFICATION.

Improvements in Typewriting Machines.

I, THOMAS OLIVER, of Dubuque, Iowa, United States of America, Mechanician, do hereby declare the nature of my invention to be as follows :—

My improvements in typewriting machines are more particularly applicable to machines of that kind having a revolving platen or cylinder against which the paper is held during the act of printing, which platen is mounted in an endwise movable carriage and wherein the types are mounted on swinging type bars located above the platen and arranged to swing on horizontal axis arranged transversely to the platen, so that the types will strike downwardly upon the platen and the letters printed will be constantly in view of the operator. Most of the improvements constituting my invention, are, however, adapted for application to machines of other kinds than that above mentioned.

As an improvement in the type bars of machines of the kind above referred to, when the type bars of said machines are made of U-form and the types are attached to the centre part or loop of the bar, I propose to make the type carrying bars of graduated size or tapered from the pivotal points of the bars outwardly to the type head, thereby giving the type bars graduated strength or stiffness by which vibratory movement of the type head is prevented and better results are secured in the operation of the type bars. I further propose to improve the construction of such type bars by making the several type heads thereof of varying weights, making the type heads belonging to the shorter arms heavier than those belonging to the longer arms and thus securing by the graduated weight of the type heads a practically equal impact or force in the blow with which the type heads strike the paper.

In typewriting machines in which the type arms carry type heads having a plurality of letters thereon and in which the platen is shifted or moved bodily to bring the printing point in line with either one of the types on the type-head, the paper carriage has been supported on a movable or shifting frame provided with guides for the carriage and which is actuated by suitable shifting key or keys. As an improved means for supporting such shifting frame I propose to employ upright standards on the machine frame having pivotal or flexible connection with the shifting frame, and having bearing surfaces for engaging the machine-base, which are elongated in the direction of the swing of the arms, and are so shaped or curved as to maintain the shifting-frame practically in the same horizontal plane when moved or shifted to either of its several positions. I further propose to employ in connection with such supporting standards, bearing pieces or shoes attached to the machine base and provided with bearing recesses in which the standards rest and by which they are held in place or confined from lateral movement when the standards are moved or oscillated in the movements of the shifting frame. Said standards are adapted to swing in planes perpendicular to the direction of the motion of the paper carriage, so as to enable the shifting frame to be moved in a direction to give lateral movement to the carriage, without the use of other supports for the shifting frame, except such guides or guiding devices as may be necessary to hold the frame from turning or rotating on the said standards and for maintaining it in its normal working position, as heretofore common in such machines. The means employed for this purpose in connection

with such oscillating standards will commonly consist of a rigid rearward projection on the frame having at its rear end a horizontal rod which engages a guide aperture in a standard rising from the machine frame, stops being placed upon said guide rod to limit the back and forward movement of the shifting frame.

As an improved construction in the spacing devices or means by which the spring propelled carriage is allowed to move forward step by step as the types act successively on the platen, I propose to employ devices as follows:

The carriage is provided with a longitudinal toothed bar or rack, which is engaged by means of a pinion secured to a rotating shaft, on which is mounted an escapement wheel. The end of said shaft carrying the pinion is mounted in a sliding block which is movable toward and from the rack, so that by the shifting of the block the pinion may be engaged with, and disengaged from the rack at will. The lower end of said shaft is mounted loosely in a bearing or otherwise so mounted as to permit the free lateral or oscillating movement of the said pinion toward and from the rack bar. The pinion is held or pressed constantly toward the rack bar by means of a spring which is attached to an adjacent stationary part of the machine frame and engages the block in such manner as to carry the same toward the rack bar. The rotation of said escapement wheel is controlled by means of a pivoted lever which carries stiff and limber pawls to engage in alternation the teeth of the escapement wheel as the lever is oscillated. Said lever is actuated through the medium of a space bar, which normally rests in contact with the lower edges of the key levers.

For releasing the pinion from the rack-bar, to permit the free movement of the carriage when desired, a swinging releasing bar is located on the carriage, adjacent to the rack-bar and in position to engage an annular bearing surface on the pinion or its shaft, when the releasing bar is moved toward said pinion and in a direction to thrust or hold the latter free from the rack-bar. Said releasing bar is actuated by means of an endwise sliding trip rod, mounted on the carriage and acting on the releasing bar through the medium of a bell-crank lever, one end of which is connected with the trip-rod and the other of which is adapted to act on the releasing bar to move or oscillate the same.

As an improved construction in means for actuating the revolving platen of a typewriting machine, I propose to employ, in connection with a platen actuating device which turns the platen for line spacing and includes a ratchet wheel which is acted upon by a pawl for turning the platen, a frictional connection between the ratchet wheel and the platen shaft, so constructed that, by application of suitable force to the platen shaft the same may be turned while the ratchet wheel remains stationary. This construction enables the platen to be shifted for adjusting the paper accurately to a desired position independently of the line spacing devices. I further propose to employ, in connection with such frictional connection between the ratchet wheel and the platen, a locking device mounted on the carriage and adapted to engage the holding pawl of the ratchet wheel so as to positively lock the pawl in engagement with the wheel and thus prevent any rotation of said wheel when it is desired to turn or shift the platen by hand in the manner above described. Such locking device for the holding pawl of the ratchet wheel is of great advantage for use in connection with the frictional connection between the ratchet wheel and platen; for the reason that it permits the operator at will to shift the platen, so as to change the point at which the type strike the same or the paper, thereby securing adjustment of the paper relatively to the type, which cannot be obtained in the usual construction except by shifting the paper on the platen.

As a still further improvement in the line spacing mechanism I propose to provide automatic actuating device for the platen, so constructed that each time the platen is moved endwise by the operator for beginning a new line the platen will be turned or rotated automatically, a line space at a time. The device I propose to employ for giving such lines space movement, consists of an oscillating arm mounted on the carriage and provided with a feed lever, pivoted

to the arm and provided with a stud which acts on the teeth of the ratchet wheel to turn the latter and the platen when the arm is swung or oscillated; and to provide means for oscillating the arm, consisting of a sliding cam which moves endwise with respect to the carriage and which acts on a pin or stud at the free end of the feed lever, which latter is swung or moved on the arm upon the first contact of the cam therewith, until the stud thereon engages the ratchet wheel, after which further action of the cam moves both the feed lever and the arm to which it is pivoted, until the platen has been turned or moved a line-space distance. Said sliding cam is moved or shifted by contact with a stop on the machine frame, as the carriage is moved back to its starting point by the operator. The extent of rotation of the platen at each backward movement of the carriage is determined by the extent of oscillatory movement of the arm, and this in turn is controlled by means of stops which limit its backward swing after it is released from the action of the sliding cam. To afford a variation in the stroke of the arm, one of said stops is made movable while the other is stationary and the movable stop is adapted to be swung out of the path of the arm to give a greater extent of throw and to be moved into the path of the arm and thus arrest the same at a desired point to give a shorter or lesser throw; the stops being arranged at a proper distance apart to give half or full space for a line, as desired. Such movable stop I prefer to make in the form of a swinging arm or lever, which is pivoted to the carriage, and the free end of which is adapted for engagement with the swinging arm by which the platen is actuated.

As an improvement in the paper feeding devices for typewriting machine, I propose to employ in connection with the usual feed roll by which the paper is held in contact with the platen, gearing connecting the shaft of said feed roll with the platen shaft, such gearing consisting of a spur wheel on the platen shaft and a pinion on the feed roll shaft, so arranged as to drive the feed roll positively at the same surface speed as that of the platen, so that the paper will be fed or moved positively by the action of opposing moving surfaces and liability of slipping thereof or a failure to feed, which sometimes occurs when the feeding is accomplished by frictional contact of the platen only with the paper, is entirely avoided.

In a typewriting machine of the character hereinbefore referred to; namely, one in which the carriage is moved in one direction by a spring and is returned to its starting point against the tension of the spring by hand pressure, the starting point of the carriage is determined by means of a stop, commonly called a margin stop, because the position in which it is placed determines the width of the margin left on the sheet in printing. As an improved construction such margin stop is commonly made adjustable for varying the width of the margin of the printed page; and as an improved construction in such an adjustable stop I propose to make it as follows;

The stop has the form of a sliding block mounted on a transverse guide bar, which I prefer should be also the main guide bar on which the carriage slides or travels. In this guide bar is formed a series of holes or recesses, with either of which a pin on the said block is adapted to engage. The block is held upon the guide-bar by means of a U-shaped clip which embraces the guide-bar and is pivoted to the block by means of a pivot pin inserted through the block at a point remote from the said pin therein; so that by swinging the block on its pivot the pin may be inserted in or released from the holes in the guide-bar. The block is so disposed that contact of the carriage therewith or pressure of the carriage thereon when it comes in contact with the same, tends to swing the block in a direction to force the pin into the hole of the guide-bar, with which it may be engaged, so that the block will remain normally interlocked with the guide-bar and contact of the carriage therewith will have no tendency to dislodge it but will tend to hold it more firmly in its locked position. The stop may, however, be easily and quickly shifted on the bar for adjustment by swinging its end which contains the said pin outwardly, and then sliding the lock along the bar until in position for

the engagement of the pin with another one of the holes in the bar. A spring attached to the block and acting on the bar, serves to hold the block in its locked position and to prevent accidental disconnection of the pin from the hole in which it may be inserted.

The sliding cam hereinbefore referred to as a means of actuating the platen, is operated as before stated by contact with the stationary part of the machine frame when the carriage is moved backwardly to its starting point; and as a preferable construction of the parts, the cam is provided with an endwise sliding rod, attached to the cam and arranged to strike at its end against the margin stop itself, so that in the backward movement of the carriage the said cam will first be moved or shifted by contact with the margin stop and the carriage finally stopped by means of a suitable stop which limits the sliding movement of the cam on the carriage. The purpose of this construction is to afford a simple and convenient means for throwing the line spacing devices out of action when desired, and this is afforded by making that part of the margin stop against which the cam acts or strikes movable into and out of the path of the part of the cam which strikes the same. As an improved means of constructing these parts in detail, I propose to provide the margin stop with a pivoted or swinging plate provided with a hand lever and so weighted that it will normally stand in position for contact of the cam therewith. By the application of the hand to the said swinging plate or lever, it may be swung out of the path of the cam and there held at the time the carriage is thrown backward, thereby preventing any action of the line spacing devices at such time.

In typewriting machines of that class in which the types are arranged to strike downwardly upon the platen, so that the paper may be exposed to view constantly during the progress of the writing, it is necessary, where an inking ribbon is used, that guides should be provided for the ribbon adjacent to the printing point, which guides are movable so as to hold the ribbon adjacent to the paper at the time the impression is made, but to throw or lift the same away from the paper and thus render it visible after each letter is printed. As an improved ribbon throw, or device for so guiding and actuating the ribbon, I propose to employ a construction as follows:

Pivoted to the rigid supporting arms which are attached to the machine frame and which extend to points over the platen, is a rock-shaft arranged parallel with and above the platen and carrying two depending arms, to the lower ends of which are attached two ribbon guides or loops, one of which is arranged at either side of the printing point, said loops being arranged horizontally and beneath the pivotal axis about which they swing. Said rock-shaft is connected by means of a rigid arm to a suitable connecting rod with a swinging frame, which is actuated by all of the key levers of the machine, so that the rock-shaft is moved and the ribbon guides oscillated each time an impression is made; the loops standing normally remote from the platen and being swung into position adjacent to or over the same at the time the keys are depressed. The pivotal axis of the loops or guides is so arranged with respect to the same and to the platen, that the loops stand normally in a position forward of the platen or at the side of their pivotal axis adjacent to the operator, and in an inclined or oblique position so that the ribbon stands edgewise to the line of vision as the operator looks toward the platen on which the paper rests. By this arrangement of the ribbon guides the ribbon is held in such position as to avoid obstruction to the vision at all times, except when the impression is being made, while at the same time a very short or slight movement of the ribbon is required to bring it into its operative position.

As an improved ribbon feeding device adapted for use in connection with typewriting machines having two ribbon spools upon which the ribbon is wound in alternation by power applied first to one spool and then to the other, devices are provided as follows:

Each spool is provided with a gear wheel attached to one end of the same and which intermeshes with a pinion mounted on a shaft which is driven from one of

the operative parts of the machine through a suitably arranged ratchet connection. Each of said shafts is mounted at its end adjacent to the spool in a double or duplex bearing consisting of two bearing notches or apertures, in either of which the shaft may be placed, and over both of which is placed a single, spring-actuated retaining arm or bar, which serves to close the openings of both notches and to retain the shaft in either one of the notches in which it may be located. One of the notches or bearing apertures is located in position to hold the shaft engaged with the gear wheel on the spool, while the other holds it in position free therefrom. The retaining bar referred to, being held by spring pressure only, the shaft may be easily shifted from one notch to the other by merely pulling it outward against the pressure of the retaining bar and then moving or sliding it along said bar until opposite the other notch and inserting it in the same; the spring retaining bar returning to its normal position as soon as the shaft is released. Both of the shafts being arranged as described, they may be shifted at once by the hand, so as to release the engaged one and engage the previously disengaged one and thus bring either spool into actuating connection with the operating devices as desired.

As an improved construction in ribbon spools consisting of a central barrel and two sides or ends, I propose to make the barrel part of the spool of a piece of sheet metal having parallel sides provided with outwardly extending projections adapted for insertion through suitable annularly arranged perforations in the heads, so that when the said strip or piece of metal is bent into the form of a cylinder the said prongs may be inserted through said apertures and thus bent down against the outer surface of the heads so as to rigidly hold the same upon the barrel. To provide means for fastening the end of the ribbon to such a barrel so made of a strip of sheet metal, I propose to provide said strip at one end with a pointed or V-shaped projection arranged to stand opposite an opening or notch cut in the opposite end of a strip and forming a free projection or spur over which the end of the ribbon may be hooked or on which it may be caught and the end of the spur thereafter bent down so as to permanently hold the ribbon against detachment when completely unwound from the barrel.

Dated this 7th day of January 1896.

THOMAS OLIVER.

Haseltine, Lake & Co.,
45 Southampton Buildings, London, W.C., Agents for the Applicant.

COMPLETE SPECIFICATION.

Improvements in Typewriting Machines.

I, THOMAS OLIVER, of Dubuque, Iowa, United States of America, Mechanician do hereby declare the nature of my invention and in what manner the same is to be performed, to be particularly described and ascertained, in and by the following statement:—

My improvements in typewriting machines are more particularly applicable to machines of that kind having a revolving platen or cylinder against which the paper is held during the act of printing, which platen is mounted in an endwise movable carriage and wherein the types are mounted on swinging type bars located above the platen and arranged to swing on horizontal axis arranged transversely to the platen, so that the types will strike downwardly upon the platen and the letters printed will be constantly in view of the operator. Most of the improvements constituting my invention, are, however, adapted for application to machines of other kinds than that above mentioned.

As an improvement in the type-bars of machines of the kind above referred to, when the type-bars of said machines are made of U-form, the types are formed on

type-heads attached to the center parts or loops of the bars and the several type-heads are made of varying weights; the type-heads belonging to the shorter arms being heavier than those belonging to the longer arms. By this construction, I obtain a practically equal impact or force in the blow with which the type-heads strike the paper.

In typewriting machines in which the type-arms carry type-heads having a plurality of letters thereon and in which the platen is shifted or moved bodily to bring the printing point in line with either one of the types on the type head, the paper carriage has been supported on a movable or shifting frame provided with guides for the carriage and which is actuated by a suitable shifting key or keys. As an improved means for supporting such shifting frame, I propose to employ upright standards on the machine frame having pivotal or flexible connection with the shifting frame, and having bearing surfaces for engaging the machine base, which are elongated in the direction of the swing of the arms, and are so shaped or curved as to maintain the shifting frame practically in the same horizontal plane when moved or shifted to either of its several positions. The curved bearing surfaces of the standards are longitudinally grooved, and I employ in connection with said standards, bearing pieces or shoes of sheet metal having bearing edges which enter the grooves in the standards and projections at their ends by which the standards are held in place or confined from movement on the shoes when the said standards are moved or oscillated in the movements of the shifting frame. Said standards are adapted to swing in planes perpendicular to the direction of the motion of the paper carriage so as to enable the shifting frame to be moved in a direction to give lateral movement to the carriage, without the use of other supports for the shifting frame, except such guides or guiding devices as may be necessary to hold the frame from turning or rotating on the said standards and for maintaining it in its normal position. The means employed for this purpose in connection with such oscillating standards will commonly consist of a rigid rearward projection on the frame having at its rear end a horizontal rod which engages a guide aperture in a standard rising from the main frame, stops being placed upon said guide rod to limit the backward and forward movement of the shifting frame.

As an improved construction in the spacing devices or means by which the spring propelled carriage is allowed to move forward step by step as the types act successively on the platen, I propose to employ devices as follows:—

The carriage is provided with a longitudinal toothed bar or rack, which is engaged by means of a pinion secured to a rotating shaft, on which is mounted an escapement wheel. The end of said shaft carrying the pinion is mounted in a sliding block which is movable toward and from the rack, so that by the shifting of the block the pinion may be engaged with, and disengaged from the rack at will. The lower end of said shaft is mounted loosely in a bearing or otherwise so mounted as to permit the free lateral or oscillating movement of the said pinion toward and from the rack bar. The pinion is held or pressed constantly toward the rack bar by means of a spring which is attached to an adjacent stationary part of the machine frame and engages the block in such manner as to carry the same toward the rack bar. The rotation of said escapement wheel is controlled by means of a pivoted lever which carries stiff and limber pawls to engage in alternation the teeth of the escapement wheel as the lever is oscillated. Said lever is actuated through the medium of a space bar, which normally rests in contact with the lower edges of the key levers.

The axis of oscillation of the shaft which carries the pinion and escapement wheel is located adjacent to the said escapement wheel, so that the necessary movement of the shaft for throwing the pinion into and out of engagement with the rack, may take place without throwing the escapement wheel out of operative relation with the said stiff and limber pawls by which its rotation is controlled.

For releasing the pinion from the rack bar, to permit the free movement of the carriage when desired, a swinging releasing bar is located on the carriage, adjacent

to the rack bar and in position to engage an annular bearing surface on the pinion or its shaft when the releasing bar is moved toward said pinion and in a direction to thrust or hold the latter free from the rack bar. Said releasing bar is actuated by means of an endwise sliding trip rod, mounted on the carriage and acting on the releasing bar through the medium of a bell-crank lever, one end of which is connected with the trip rod and the other of which is adapted to act on the releasing bar to move or oscillate the same.

As an improved construction in means for actuating the revolving platen of a typewriting machine, I propose to employ in connection with a platen actuating device, which turns the platen for line spacing and includes a ratchet wheel which is acted upon by a pawl for turning the platen, a frictional connection between the ratchet wheel and the platen shaft, so constructed that, by application of suitable force to the platen shaft the same may be turned while the ratchet wheel remains stationary and I further propose to employ in connection with such frictional connection between the ratchet wheel and the platen, a locking device mounted on the carriage and adapted to engage the holding pawl of the ratchet wheel so as to positively lock the pawl in engagement with the wheel and thus prevent any rotation of said wheel when it is desired to turn or shift the platen by hand for adjusting the paper accurately to a desired position independently of the line spacing devices. Such locking device for the holding pawl of the ratchet wheel is of great advantage for use in connection with the frictional connection between the ratchet wheel and the platen; for the reason that it permits the operator at will to shift the platen, so as to change the point at which the type strike the same or the paper, thereby securing adjustment of the paper relatively to the type, which cannot be obtained in the usual construction except by shifting the paper on the platen.

As a still further improvement in the line spacing mechanism I propose to provide automatic actuating device for the platen, so constructed that each time the platen is moved endwise by the operator for beginning a new line the platen will be turned or rotated automatically, a line space at a time. The device I propose to employ for giving such lines space movement, consists of an oscillating arm mounted on the carriage and provided with a feed lever, pivoted to the arm and provided with a stud which acts on the teeth of the ratchet wheel to turn the latter and the platen when the arm is swung or oscillated; and to provide means for oscillating the arm, consisting of a sliding cam which moves endwise with respect to the carriage and which acts on a pin or stud at the free end of the feed lever, which latter is swung or moved on the arm, or the first contact of the cam therewith, until the stud thereon engages the ratchet wheel, after which further action of the cam moves both the feed lever and the arm to which it is pivoted, until the platen has been turned or moved a line-space distance. Said sliding cam is moved or shifted by contact with a stop on the machine frame, as the carriage is moved back to its starting point by the operator. The extent of rotation of the platen at each backward movement of the carriage is determined by the extent of oscillatory movement of the arm, and this in turn is controlled by means of stops which limit its backward swing after it is released from the action of the sliding cam. To afford a variation in the stroke of the arm, one of said stops is made movable while the other is stationary and the movable stop is adapted to be swung out of the path of the arm to give a greater extent of throw and to be moved into the path of the arm and thus arrest the same at a desired point to give a shorter or lesser throw; the stops being arranged at a proper distance apart to give half or full space for a line, as desired. Such movable stop I prefer to make in the form of a swinging arm or lever, which is pivoted to the carriage, and the free end of which is adapted for engagement with the swinging arm by which the platen is actuated.

As an improvement in the paper feeding devices for typewriting machines, I propose to employ in connection with the usual feed-roll by which the paper is held in contact with the platen, spring supporting arms for the said feed-roll,

adapted to hold or press the same against the platen and gearing connecting the shaft of said feed-roll with the platen shaft, such gearing consisting of a spur wheel located on the platen shaft outside of the carriage frame and a pinion on the feed-roll shaft intermeshing with the said spur wheel, these parts being so arranged as to drive the feed-roll positively at the same surface speed as that of the platen, so that the paper will be fed or moved positively by the action of opposing surfaces and liability of slipping thereof or a failure to feed, which sometimes occurs when the feeding is accomplished by frictional contact of the platen only with the paper, is entirely avoided.

In a typewriting machine of the character hereinbefore referred to; namely, one in which the carriage is moved in one direction by a spring and is returned to its starting point against the tension of the spring by hand pressure, the starting point of the carriage is determined by means of a stop, commonly called a margin stop, because the position in which it is placed determines the width of the margin left on the sheet in printing. Such margin stop is commonly made adjustable for varying the width of the margin of the printed page; and as an improved construction in such an adjustable stop I propose to make it as follows:—

The stop has the form of a sliding block mounted on a transverse guide bar, which I prefer should be also the main guide bar on which the carriage slides or travels. In this guide bar is formed a series of holes or recesses, with either of which a pin on the said block is adapted to engage. The block is held upon the guide bar by means of a U-shaped clip which embraces the guide-bar and is pivoted to the block by means of a pivot pin inserted through the block at a point remote from the said pin therein; so that by swinging the block on its pivot the pin may be inserted in or released from the holes in the guide-bar. The block is so disposed that contact of the carriage therewith or pressure of the carriage thereon when it comes in contact with the same, tends to swing the block in a direction to force the pin into the hole of the guide-bar, with which it may be engaged, so that the block will remain normally interlocked with the guide-bar and contact of the carriage therewith will have no tendency to dislodge it but will tend to hold it more firmly in its locked position. The stop may, however, be easily and quickly shifted on the bar for adjustment by swinging its end which contains the said pin outwardly, and then sliding the lock along the bar until in position for the engagement of the pin with another one of the holes in the bar. A spring attached to the block and acting on the bar, serves to hold the block in its locked position and to prevent accidental disconnection of the pin from the hole in which it may be inserted.

The sliding cam hereinbefore referred to as a means of actuating the platen, is operated as before stated by contact with the stationary part of the machine frame when the carriage is moved backwardly to its starting point; and as a preferable construction of the parts, the cam is provided with an endwise sliding rod, attached to the cam and arranged to strike at its end against the margin stop itself, so that in the backward movement of the carriage the said cam will first be moved or shifted by contact with the margin stop and the carriage finally stopped by means of a suitable stop which limits the sliding movement of the cam on the carriage. That part of the margin stop against which the cam acts or strikes is made movable into and out of the path of the part of the cam which strikes the same, said movable part preferably consisting of a pivoted or swinging plate or detent provided with a hand lever and so weighted that it will normally stand in position for contact with the cam therewith.

A cam arm on the carriage frame is adapted to swing said detent out of the path of the rod which is attached to the sliding cam, after the latter has been moved to turn the platen and before the carriage has reached the extreme limit of its movement, so as to allow said rod and the sliding cam to be restored to its rearward position, by the action of an actuating spring applied thereto, and thus permit the platen feeding arm to return to its rearward position; the result of this construction being that the platen feeding arm and the sliding cam which operates

the same are actuated to turn the platen and are completely restored to their normal positions during the movement of the carriage backwardly to its starting point, and no movement of the platen actuating devices takes place in the subsequent forward movement of the carriage under the action of the carriage actuating spring.

In typewriting machines of that class in which the types are arranged to strike downwardly upon the platen, so that the paper may be exposed to view constantly during the progress of the writing, it is necessary, where an inking ribbon is used, that guides should be provided for the ribbon adjacent to the printing point, which guides are movable so as to hold the ribbon adjacent to the paper at the time the impression is made, but to throw or lift the same away from the paper and thus render it visible after each letter is printed. As an improved ribbon throw, or device for so guiding and actuating the ribbon, I propose to employ a construction as follows:—Pivoted to the rigid supporting arms which are attached to the machine frame and which extend to points over the platen, is a rock-shaft arranged parallel with and above the platen and carrying two depending arms, to the lower ends of which are attached two ribbon guides or loops, one of which is arranged at either side of the printing point, said loops being arranged horizontally and beneath the pivotal axis about which they swing. Said rock-shaft is provided with a rigid arm connected, by means of a suitable connecting rod, with a swinging frame, which is actuated by all of the key levers of the machine, so that the rock-shaft is moved and the ribbon guides oscillated each time an impression is made; the loops standing normally remote from the platen and being swung into position adjacent to or over the same at the time the keys are depressed. The pivotal axis of the loops or guides is so arranged with respect to the same and to the platen, that the loops stand normally in a position forward of the platen or at the side of their pivotal axis adjacent to the operator, and in an inclined or oblique position so that the ribbon stands edgewise to the line of vision as the operator looks toward the platen on which the paper rests. By this arrangement of the ribbon guides the ribbon is held in such position as to avoid obstruction to the vision at all times, except when the impression is being made, while at the same time a very short or slight movement of the ribbon is required to bring it into its operative position.

As an improved ribbon feeding device adapted for use in connection with typewriting machines having two ribbon spools upon which the ribbon is wound in alternation by power applied first to one spool and then to the other, devices are provided as follows:

Each spool is provided with a gear wheel attached to one end of the same and which intermeshes with a pinion mounted on a shaft which is driven from one of the operative parts of the machine through a suitably arranged ratchet connection. Each of said shafts is mounted at its end remote from the spool in a bearing, permitting universal, lateral or oscillatory movement thereof, and its end adjacent to the spool in a double or duplex bearing consisting of two bearing notches or apertures, in either of which the shaft may be placed, and over both of which is placed a single, spring-actuated retaining arm or bar, which serves to close the openings of both notches and to retain the shaft in either one of the notches in which it may be located. One of the notches or bearing apertures is located in position to hold the shaft engaged with the gear wheel on the spool, while the other holds it in position free therefrom. The retaining bar referred to, being held by spring pressure only, the shaft may be easily shifted from one notch to the other by merely pulling it outward against the pressure of the retaining bar and then moving or sliding it along said bar until opposite the other notch and inserting it in the same; the spring retaining bar returning to its normal position as soon as the shaft is released. Both of the shafts being arranged as described, they may be shifted at once by the hand, so as to release the engaged one and engage the previously disengaged one and thus bring either spool into actuating connection with the operating devices as desired.

As an improved construction in ribbon spools consisting of a central barrel and two sides or ends, I propose to make the barrel part of the spool of a piece of sheet metal having parallel sides provided with outwardly extending projections adapted for insertion through suitable annularly arranged perforations in the heads, so that when the said strip or piece of metal is bent into the form of a cylinder the said prongs may be inserted through said apertures and thus bent down against the outer surface of the heads so as to rigidly hold the same upon the barrel. To provide means for fastening the end of the ribbon to such a barrel so made of a strip of sheet metal, I propose to provide said strip at one end with a pointed or V-shaped projection arranged to stand opposite an opening or notch cut in the opposite end of a strip and forming a free projection or spur over which the end of the ribbon may be hooked or on which it may be caught and the end of the spur thereafter bent down so as to permanently hold the ribbon against detachment when completely unwound from the barrel.

In the accompanying drawings:

Figure 1 is a side view of a typewriting machine embodying my invention with the side plate of the frame removed to show the working parts.

Figure 2 is a plan view of said machine with the paper carriage removed to show the parts beneath the same.

Figure 3 is a plan view of the paper carriage with most of the type levers removed for showing the parts immmediately adjacent to the base plate.

Figure 4 is a view in front elevation of the paper carriage removed from the machine.

Figure 5 is a view from beneath of the rack bar of the paper carriage and the adjacent parts.

Figure 6 is a detail view of the ratchet wheel attached to the platen shaft.

Figure 7 is a cross section taken on line 7—7 of Figure 6.

Figure 8 is a detail end view of the carriage frame showing the devices for actuating the platen to effect the line feed.

Figure 9 is a similar view, showing a changed position of the parts.

Figure 10 is a view of the opposite end of the carriage illustrating the device for shifting the platen.

Figure 11 is an enlarged plan view of the carriage, illustrating the devices for actuating the platen.

Figure 12 is a cross section of the carriage, taken on line 12—12 of Figure 11.

Figure 13 is a detail plan section of one end of the carriage, taken on line 13—13 of Figure 12 showing the parts below the platen.

Figure 14 is a view of the rear part of the carriage with adjacent parts of the machine frame; this being a sectional view taken on line 14—14 of Figure 1.

Figure 15 is a detail, vertical, sectional view of the platen actuating devices, taken on line 15—15 of Figure 8.

Figure 16 is a perspective view of the slotted slide and attached bearing arm shown in Figure 15.

Figure 17 is a sectional elevation of the feed arm and dog, taken on line 17—17 of Figure 15.

Figure 18 is a detail view of the platen ratchet wheel and its retaining pawl.

Figure 19 is a detail rear elevation of the bell-trip device on the carriage.

Figure 20 is an end view of the carriage guide bar, showing the margin stop and platen actuating stop thereon.

Figure 21 is a plan view of the parts shown in Figure 20.

Figure 22 is a cross section, taken on line 22—22 of Figure 21.

Figure 23 is a sectional plan view showing the margin stop in changed position.

Figure 24 is a detail sectional elevation, taken on line 24—24 of Figure 2, showing the type bar actuating devices and part of the spacing mechanism.

Figure 25 is a plan section taken on line 25—25 of Figure 24, showing the type-bar pivots and their bearings.

Figure 26 is a plan section, taken on line 26—26 of Figure 24, showing the escape wheel and other parts of the spacing mechanism.

Figure 27 is a detail plan view taken on line 27—27 of Figure 24 showing the pivotal support of the rocking frame by which the spacing devices are actuated.

Figure 28 is a central vertical section of the escapement wheel shaft and parts supporting the same taken on line 28—28 of Figure 24.

Figure 29 is a detail vertical section, taken on line 29—29 of Figure 2, showing in side elevation the spacing and the ribbon-shifting devices.

Figure 30 is a side elevation of the oscillating detent lever which controls the escapement wheel.

Figure 31 is a perspective view of the same.

Figure 32 is a sectional view of the same taken on line 32—32 of Figure 30.

Figure 33 is a detail section of the ribbon guides and actuating devices therefor, showing a position of the same different from that shown in Figure 29.

Figure 34 is a detail view of the blank from which is made the barrel of one of the ribbon spools.

Figure 35 is a face view of the blank forming the head or end of one of the ribbon spools.

Figure 36 is a cross section, showing the locking devices for the spacing levers, taken on line 36—36 of Figure 1.

Figure 37 is a detail side view of one of the key shifting levers, showing the curved slot by which motion is transferred to the shifting carriage support.

Figure 38 is a view of the other one of said levers, showing the curved slot therein.

Figure 39 is a detail section, taken longitudinally through the guide-bar of the paper carriage and one of the rocking standards on the frame which supports said bar.

Figure 40 is a detail view of the rack bar and the pinions which engages the same showing the shape of the teeth on said parts.

Figure 41 is a detail section of the lower bearing of one of the ribbon-feed shafts taken on line 41—41 of Figure 1.

Figure 42 is a detail section of the bearings for the upper end of one of the ribbon feed shafts, taken on line 42—42 of Figure 1.

Figure 43 is an enlarged detail plan view of the lower bearing of the escape-wheel shaft.

Figure 44 is a cross section of the ribbon spool taken on line 44—44 of Figure 35.

Figure 45 is a cross section of the same taken longitudinally of the barrel on the line 45—45 of Figure 44.

As shown in said drawings A designates the base of the machine, consisting of a flat, horizontal, flanged metal casting and B B the key levers which extend from the front to the rear of the machine, above and generally parallel with the base plate, and are pivotally supported at their rear ends by means of transverse pivots *b* supported in standards A^1 on the base plate. Said levers are divided into two groups, in each of which the rear ends of the levers are brought together and pivoted to one of the standards, as clearly seen in the plan view, Figure 1. At their front ends the key levers engage vertical guide slots *a* formed in a transverse guide bar A^3 attached to the base plate. (Figures 1, 2, 3, 36, and 37.)

The several key levers are lifted and held normally in an elevated position by means of springs B^1 (Figure 1) herein shown as made of U-form and located between the base plate and the key levers, with their upper ends engaged with the lower edges of the key levers by means of hooked ends b^1 on said springs.

C C indicate the type-bars, which are of loop or U-form and are mounted on supporting frames D D in two groups at opposite sides of the center of the machine so as to swing on horizontal axes, extending from the front to the rear of the machine and which act on a platen or paper supporting roller E arranged transversely of the machine beneath the type-bars, in position for the action

thereon of the type-bars of both groups and mounted in an endwise movable carriage which is moved or shifted endwise to feed the platen and the paper thereon past the printing or striking point of the type-bars. The supporting frames D overhang the platen E (Figures 1, 24, and 25), and are supported by means of posts or uprights D^1 on the base. The several type-bars are rigidly attached at their ends to horizontally arranged rock-shafts or spindles C^1, which are mounted in bearings formed in the said supporting frames and held therein by cap plates or bars D^2, (Figures 24 and 25). Said type bars are provided with type heads C^2 attached to the central parts or bends of the bars, and adjacent to their pivots are provided (Figure 24) with radial crank arms *c*, which are connected by means of upright links c^1 with the key levers at the points intermediate of the ends of the latter. At the outer ends of the supporting frame D are located upright yokes D^3 and attached to the same are inclined supports or rests D^4 which are arranged in an inclined position between the arms of the yokes; their lower extremities being secured to the inner ends of the supporting frames and their upper ends are attached to the said yokes. Said rests are provided on their inner faces with impact cushions C^3 against which the rear sides of the type heads rest when in their normal or retracted position.

The type heads are made of graduated weight and those carried by the shorter type bars are heavier than those on the longer type-bars, with the result that all of the types may be made to strike with practically the same force in making the impression, notwithstanding the varying lengths of the type-arms. Uniformity of impression and in the appearance of the several letters is thus obtained.

The type bar heads carry each a plurality of type faces or types, preferably three, whereby an upper and lower case letter and a numeral or a punctuation mark may be arranged on each type head; the platen and its carriage being movable and controlled by suitable shifting devices, so that either of the types on the type heads may be printed from at will.

The type bars are made of sheet metal strips bent into proper shape and the type heads consist of metal blocks slotted in their rear faces to receive the sheet metal type-bars and secured to the same by soldering or in any other suitable manner.

The paper carriage frame, in the preferred construction illustrated, consists of two end plates E^1 E^1, a longitudinal bar E^2 at the lower front part of the frame, which constitutes the rack-bar of the spacing mechanism and a rear frame bar E^3 (Figure 11). The said carriage is mounted to slide endwise on a supporting frame, which consists of a transverse guide bar F, a horizontal yoke piece F^1 extending rearwardly therefrom, a centrally arranged frame plate F^6 and a horizontal guide-rod F^2 which is attached to the rear end of the yoke piece F^1 and slides in a bracket F^3 attached to the rear part of the base plate.

The devices illustrated for sustaining the shifting guide-bar consists of two rocking standards G, G, (Figures 1 and 29) which have pivotal connection with the said guide-bar by means of a ball or head *g* on the upper end of each standard engaging a socket *f* (Figure 39) in the bottom surface of said guide-bar. The lower ends of said standards are extended from front to rear of the machine to form curved rockers G^1 which rest on shoes G^2 secured to the bed plate A. Said rockers are curved on a circular arc concentric with the pivot at the opposite end of the standard, so that when the guide bar is moved backward or forward, it will remain practically in the same horizontal plane. The said shoes G^2 are made of sheet metal and are provided with vertical parts or flanges g^1 engaging grooves g^2 formed in the lower surface of the standards. The said shoes are also provided at their ends with upwardly projecting lugs g^3 located at the front and rear of the rockers G^2, and serving to loosely confine the rockers and hold them from backward or forward movement. The said supporting standards may be reversed and the shoes attached to the shifting frame instead of to the base without affecting the operation of these parts.

The guide bar F, together with the yoke F^1 constitute the shifting frame of

the machine and the engagement of the rod F^2 with the guide F^3 affords a support for the frame which, in connection with the rocking standards G, G, serves to hold the frame in a horizontal position while at the same time leaving it free to be shifted backwardly or forwardly with the carriage which is supported by said frame, in order to print from either one of the three types upon the type heads.

To hold the guide bar F from endwise movement and from being lifted vertically, the same is engaged with horizontal stationary guides F^4 (Figures 3, 14 and 39) which extend from front to rear of the machine frame, and are provided with overhanging parts or flanges f^1 (Figure 39) which are engaged by projecting lugs f^2 on the said bar in such manner as to hold the bar from rising. Said lugs f^2 are herein shown as formed by the extremities of the yoke F^1 which extend beneath the guide bar and are turned outwardly parallel with the bar; being secured thereto by screws or rivets. The said guide-bar is also provided with an anti-friction roller f^3 at its left hand end, which by engagement with the inner edges of the adjacent flange f, serves to resist the tendency to endwise movement in the bar due to the action of the carriage actuating spring. As herein shown, the guides F^4 are formed upon or cast integral with the standards D^1, by which the guide bars and their supports are sustained and the roller f^3 is mounted on a stud or pivot f^4 attached to one end of the yoke F^1, the guide bar being cut away or notched on its under surface to receive the said guides F^4 and said roller. The backward and forward movement of the shifting frame is limited and controlled by means of shifting stops or nuts f^5 f^5 placed on the stem F^2 at either side of the guide bracket F^3.

The paper carriage is sustained at its front edge upon the guide bar F by means of supporting rollers E^4 which engage a longitudinal guide groove F^5, formed in the top surface of the guide bar F (Figure 12). Said supporting rollers are preferably two in number (Figure 5) and are connected with the carriage frame by means of a longitudinal channel bar E^5 (Figures, 12 and 14) which is secured to the bottom or under surface of the bar E^2 of the carriage and between the depending flanges of which the said rollers E^4 are journalled by means of bearing pivots inserted through central hubs formed on the rollers and through the depending flanges of said channel bar. The hubs of the said rollers are made long enough to extend between said flanges and thereby hold the rollers from lateral movement, as clearly seen in Figure 5.

The carriage is held from rising, or being lifted from its place, by means of a longitudinal groove F^7 formed in the rear face of the guide-bar F, near its top, which groove is engaged by two lugs e, e, on the carriage frame. Said lugs are shown as formed on the lower side of a plate E^6 which is secured by rivets to the rear flange of the channel bar E^5, Figures 5, 12 and 14.

The rear part of the carriage is sustained by means of a supporting roller H, (Figures 1, 2 and 29) which is mounted on a standard H^1, attached to the frame yoke F^1; in position to extend beneath the rear frame bar E^3 of the carriage frame, which latter rests and travels on said roller H in the end-wise traverse of the carriage. To hold the carriage from rising at its rear part a movable stop H^2 is secured to the upper end of the post H^1 in such manner as to overhang the said bar. Said stop is herein shown as having the form of a thumb-screw (Figure 29) to which is attached a threaded shank h which enters a socket in the upper end of the post H^1. The said post H^1 is shown as secured to the yoke F^1 by passing through a hole formed in a rearwardly projecting lug f^4 on said yoke and having nuts h^1, h^2 placed on the screw threaded lower end of the post above and below said yoke, thereby enabling the post to be adjusted vertically with the effect of raising or lowering the rear part of the carriage, which construction enables the carriage to be adjusted accurately to a horizontal position.

The shifting frame is so constructed that the platen E and its carriage may be shifted in either direction from a central point, the carriage being shifted backwardly for one set of types or characters and forwardly for another set, while

it remains immovable or in its central position for the third or intermediate set of types. To accomplish such movement of the carriage backward and forward from its central position devices are connected with the shifting frame as follows :

I, I^1 represent shifting levers having their keys i, i^1 in the key board, preferably at the left hand side of the same, and pivoted at their rear ends to a standard I^2 rising from the base plate A (Figures 1 and 3); said levers being guided in vertical slots formed in the left hand end of the guide plate A^3. Mounted on the frame base at the rear of the guide plate A^3 is a rock shaft J, (Figures 1, 2, 3, 29 and 37,) which extends from a point beneath the shifting levers to the center of the machine and is provided with upwardly extending crank arms J^1, J^2 and J^3. The crank arm J^1 (Figures 3 and 29) is located near the center of the machine and is connected with the shifting frame by means of a rearwardly extending rod J^5 (Figure 29) the rear end of which is pivoted to a depending lug j on the central plate F^6 of the shifting frame. (Figures 3 and 29.)

The two crank arms J^2 J^3 are adapted for engagement respectively with the shifting levers I and I^1. Said shifting levers are provided with curved slots i^2, i^3, which are so shaped or curved that the depression of one key lever will throw the rock shaft J in one direction, while the depression of the other key lever will turn the said rock shaft in the opposite direction, thereby giving corresponding movement in opposite directions to the shifting frame. I^2 and I^3 (Figure 1) are lifting springs applied between the base plate and the shifting levers to hold the latter normally elevated. The shifting levers I and I^1 are provided with stop-projections I^4 and I^5 adapted for contact with the guide-bar F, so as to limit the movement of the same and hold the carriage immovable when in its central position. It is sometimes desired to hold the carriage for some length of time in its shifted position, and for this purpose I have provided means for locking the shift keys in their depressed position. The devices illustrated for this purpose consist of a hand lever K (Figures 1 and 36) which is arranged vertically between the levers I and I^1 and is pivoted at its lower end to the guide plate A^3. Said lever K is provided with outwardly facing stop shoulders k, k^1, located in such position as to hold the shifting keys depressed when engaged therewith. By shifting said hand lever K to the right or left and into engagement with that one of the shifting keys which is depressed, the depressed key may be locked and held from rising.

For giving endwise motion or feed to the paper carriage, I have provided a spring actuated mechanism for giving motion to such carriage, and also a spacing or feed device by which the carriage is allowed to move under the action of said spring one space at each time a key is depressed for printing a letter.

K^1 (Figures 1 and 2) indicates a drum, which contains a carriage actuating spring and is supported upon the upper end of a standard k^2 which rises from the machine base. Said spring drum has wrapped about it a strap K^2, the free end of which is attached to a hook k^3 (Figures 4 and 5) on the carriage frame. Said drum is attached to the vertical shaft K^3, which extends downwardly through the base of the machine and is provided below the base with a ratchet wheel and escapement lever (shown in dotted lines in Figure 3) by which the tension of the spring may be regulated.

The spacing device for effecting the letter spacing operates in connection with the rack bar E^2 hereinbefore referred to and is constructed as follows :—

L, (Figures 28 and 29), indicates an upright escape wheel shaft, located near the center of the machine in front of the guide bar F, and mounted in a bearing attached to said guide bar, so that the shaft moves horizontally with the shifting frame. Said shaft carries at its upper end a gear pinion, L^1, adapted to engage the rack bar, E^2, of the carriage frame (Figure 12) and at its lower end an escape-wheel L^2. The upper end of the shaft L is adapted to move toward and from the rack bar, about an axis of oscillation located adjacent to the escape-wheel. The said shaft engages at its lower end a bearing aperture in a bracket, F^8 which is attached to the horizontal plate F^6, of the shifting frame.

In the drawings, (Figure 43), the bearing aperture l is shown as made of elongated shape in the direction in which the shaft moves or oscillates so as to afford the necessary freedom of movement in the upper end of the shaft. The upper end of the shaft L passes through a block L^3 which slides in a guide slot in an arm or bracket F^9 on the shifting frame; said arm or bracket being conveniently formed by means of a forward extension of the plate F^6 beyond the guide bar. A pin l^2, inserted through the block below the arm F^9, engages the lower surface of the arm to hold the block from rising. The bearing block L^3 is held normally in its rearward position and the said pinion is retained in mesh with the rack bar by means of a plate spring L^4, which is secured to the bracket F^8 at its lower end, and at its upper or free end engages an aperture in a lug l^1 which extends rearwardly from the block L^3.

To now describe the escape device, by which the escape wheel L^2 is allowed to turn step by step and the carriage allowed to advance under the action of the carriage actuating spring when the several keys are operated, the same is constructed as follows: M is an oscillatory escapement lever (Figures 26, 29, 30 and 32) which extends from front to rear of the machine and is pivoted on a laterally extending arm F^{10}, on the bracket F^8, so as to swing in a vertical plane, with its forward end at one side of and adjacent to the escape-wheel L^2. Said lever carries stiff and limber pawls m m^1, which are adapted for engagement with the teeth of the escape wheel so as to permit the wheel to turn tooth by tooth when the lever is oscillated. The stiff pawl m, has the form of a rigid projection or tooth on the end of the lever M, and the limber pawl m^1 is pivotally supported at its lower end, by means of a transverse pivot, between laterally separated arms m^3 m^4 on said lever, so as to swing in a vertical plane parallel with the axis of the escape-wheel. The stiff pawl m, is adapted for alternate engagement with and disengagement from the teeth of the escape-wheel by vertical movement or oscillation of the front end of the lever M; the said stiff pawl being adapted for engagement with the teeth of the wheel when the lever is elevated. The limber pawl is also adapted for engagement with and disengagement from the teeth of the escape-wheel by the vertical movement of said lever M, said pawl, for this purpose, being provided with a notch m^4 in its side nearest the escape-wheel and opposite the stiff pawl m, said notch being so located as to permit the passage of the teeth of the escape-wheel when the lever is elevated. The parts are so arranged that, when the escapement lever is depressed, the lug m^1 will engage the teeth of the same, and when it is elevated the stiff pawl m will be engaged by the said teeth and the limber pawl will be released therefrom. A back stop m^5 for the limber pawl is formed by means of a lateral projection on the lever M, and a front stop m^6 for said limber pawl, is similarly formed on said lever. The limber pawl is held normally in contact with the back stop by means of a suitably applied spring, herein shown as having the form of a coiled spring, m^7 (Figures 31 and 32) placed around the pivot m^2 of the limber pawl. The escape-wheel turns in a direction to carry the limber pawl away from the back stop m^5, when engaged with said pawl, as clearly seen in Figure 26, and said wheel, when in contact with the limber pawl, carries the same towards the back stop m^6 against the action of the spring m^7 and holds it in contact with the same. When the parts are at rest, the escapement lever stands at the lower limit of its movement, and one tooth of the escape-wheel rests in contact with the limber pawl, which holds the escape wheel from turning. When the escape lever is moved so as to lift its free end the limber pawl will be lifted until free from the escape wheel, at which time the tooth previously engaged by the limber pawl will come in contact with, and be arrested by, the stiff pawl m, while the limber pawl will be released, and, under the action of its spring m^7 will return into contact with the back stop m^5 as seen in Figure 30. Upon the subsequent descent of the escape-lever the teeth of the escape-wheel in contact with the stiff pawl will be released so as to permit the turning of the wheel, but in the descent of the escape lever the next succeeding tooth will be caught by the descending limber pawl, which will be moved thereby until arrested by the front stop, thus permitting

the turning of the escape-wheel a distance of one tooth at each oscillation of the escape lever. Any backward turning of the escape lever is prevented by the detent N, (Figure 26), which is mounted on a supporting arm N^1 attached to the bracket F^1, and held by means of a coiled actuating spring *n* in engagement with the teeth of the escape wheel.

Now referring to the means illustrated for giving motion to the escape lever, these parts are constructed as follows:—O (Figures 3 and 29) indicates a transversely arranged, vertically movable space bar located beneath and adapted for actuation by all of the key levers. Said space bar is attached to the rear ends of the two arms O^1, (Figure 3) the forward ends of which are rigidly attached to a rock shaft O^2 having bearings at its ends d^1 in the standards D^1 of the frame, as seen in Figure 24. The said space bar O is connected with the said rock shaft O^2, not only by the arms O^1, located at the ends of said bars, but also by means of two intermediate bars O^3, O^3 (Figures 25 and 29) arranged at either side of the escape devices, as clearly seen in the plan views (Figures 3 and 29). The escape lever M, is operated directly from the bar O, by means of a slotted yoke, O^4, (Figures 3, 25 and 29) which is secured to the bar adjacent to the rear end of the lever M, and is provided with a horizontal slot, *o*, extending from the front to the rear of the machine, beneath the space bar, and adapted to receive a pin, m^7, which is secured in the rear end of said lever. Through the medium of the slotted yoke, O^4, vertical movement of the space bar is transmitted directly to the escapement lever M, while backward and forward movement of said lever with the shifting frame is permitted by the said slot *o*, without affecting the action of the escape-devices.

The intermediate arms, O^3, which connect the space bar O with the rock shaft O^2, as above described, afford means for connecting a space key P, (Figures 1 and 2) located in front of the key board, with the said escape devices. This said space-key P is attached to two parallel levers, P^1 which are attached at their rear ends to a rock shaft P^2, (shown in Figures 27 and 29) around which is placed a coiled spring *p*, which acts to hold the space key normally in its elevated position. At a point forward of the rock shaft P^2 is located a cross bar P^3 (Figures 24, 27 and 29) which rigidly connects the levers p^1. Pivoted to the lever arms O^3 by means of a transverse pivot pin o^1 is a depending yoke piece P^4 having at its lower end a recessed or hook shaped part p^1, which extends beneath and embraces the cross bar P^3. A cushion, p^2, (Figures 24 and 29) is preferably located in the recessed part p^1, below the rod P^3, so as to afford a cushion between the parts and prevent noise in the operation of the spacing key. The yoke piece, P^4, is conveniently made of sheet metal, bent at its lower edge to form the recessed or hook-shaped part, p^1 and having at its upper end lugs or ears, p^3 which are bent at right angles to the body of the yoke piece (Figure 27) and pierced for the passage of the pivot rod e^1. (Figures 24 and 29.) The space bar is held in contact with the key levers, by a coiled spring O^5, placed in compression between one of the levers O^3 and the base plate of the machine, (Figure 29). An auxiliary leaf spring O^6 also aids in lifting the space bar. The upward movement of said space bar is limited by a stop O^7 secured to the base plate.

Devices are provided for moving the upper end of the shaft L and the pinion L^1 thereon away from the rack bar of the carriage, for the purpose of releasing said carriage from the spacing devices when it is desired to shift or move the carriage backward to its starting point for beginning a new line of writing or at other times; as follows:—Pivotally mounted on the carriage above the rack-bar E^2, with its lower free edge adjacent to the latter, is a longitudinally arranged releasing bar Q, having pivotal connection with the end plates E^1 of the carriage frame, by means of pivot extensions, *q*, *q*, at its upper edge (Figures 4 and 11). The lower or free edge of said releasing bar is located in position to engage an anti-friction roller Q^1, (Figure 12) mounted on the upper end of the shaft L above the said pinion L^1. A suitably applied spring, in this instance having the form of a coiled spring q^1,

surrounds one of the pivot-extensions q, of the releasing bar and serves to throw the free edge of the releasing bar rearwardly and thereby tends to hold it in its retracted position. For actuating said releasing bar, an endwise sliding trip-rod Q^2, Figures 4, 11 and 13, is arranged longitudinally of the carriage at the rear of said releasing bar, said trip rod extending beyond the end of the carriage at the left hand side of the machine, (Figures 4 and 11) and having on its end a finger piece or button Q^3. Pivoted to the rack bar E^2 at the rear of the releasing bar is a bell crank lever, Q^4 (Figure 13) one arm q^2 of which engages the rear surface of the releasing bar, and the other arm q^3, of which is connected by the pivot pin q^4, with the inner end of the trip rod Q^2. A suitably located stop q^5, secured in the rack bar E^2, serves to arrest the movement of the bell crank lever in both directions. The releasing bar with its actuating devices, obviously enables the pinion on the escape-wheel shaft to be thrown out of engagement with the rack bar on the carriage, so as to leave the carriage free to be moved backward and forward by the operator, by merely pressing on the button Q^3.

The actuating spring of the releasing bar and the spring which throws the escape-wheel shaft toward the rack bar are together of less strength than the carriage actuating spring so that when pressure is applied to the trip rod, the pinion will be released from the rack bar and will remain free therefrom.

The teeth of the rack bar are of the usual ratchet shape, having their working or contact faces at right angles with the edge of the rack bar or slightly inclined to give undercut form to the teeth, if desired. The teeth of the pinion L^1 (Figure 40) are made of hooked form; their contact faces l^3 being undercut so that the point of each tooth overhangs the base of the next tooth. As seen in Figure 40, in which l^6 l^6 indicate a line drawn through the center of the pinion at right angles with the rack bar, the point l^7 indicates the center of the pinion and l^5 a dotted line drawn through the contact faces of the two teeth which are engaged with their working faces in contact; these teeth being brought into contact before they reach a point opposite the center of the pinion. When a pinion tooth, as l^8, is engaged with the rack the adjacent pinion tooth will bear at its extremity or point against the working face of the next rack tooth at a point intermediate of the length of said rack tooth, so that in pactice, two teeth will commonly be in bearing or engagement at once. The main advantage gained by this construction is that the pressure of the rack bar on the pinion teeth so formed has no tendency whatever to throw the pinion outwardly, but on the contrary, such pressure has a greater tendency to hold the teeth interlocked or engaged with each other. The carriage may be moved back to the starting point by the outward yielding of the pinion and the upper end of the shaft on which it is mounted without the actuation of the releasing device. In practice, however, the carriage will be usually moved backwards by pressure on the end of the trip rod Q^2, acting to release the driving pinion from the rack, and thus free the carriage without any motion or movement on the part of the operator except to press on the button Q^3 in the direction the carriage is to move. On releasing the pressure on the trip rod, the driving pinion immediately re-engages the rack. It is, however, necessary to hold the carriage from backward movement at the instant the trip rod is released, and this is accomplished by the pressure of a finger of the left hand against a stationary part of the carriage adjacent to the button Q^3.

The platen E is mounted on a spindle, R, mounted in the end plates of the carriage and provided at its ends with hand wheels or milled knobs R^1 and R^2. The knob R at the left hand end of the carriage is located adjacent to the end of the trip-rod Q, so that one finger may be placed thereon when the other is resting on the button Q^3.

The platen E is movable bodily on the carriage into and out of its operative position, in order to facilitate the insertion of the paper, the ends of the platen spindle for this purpose being constructed to slide in slots e^2 in the end plates E^1. The platen is moved by means of a rock shaft R^3 mounted on the end plates and connected with the spindle R at each end of the carriage, by means of pivotally

connected toggle-arms $r\,r^1$ (Figures 11 and 12). The said rock shaft R^3 is provided with a hand crank R^4 and the toggle arms are so arranged as to stand in a slightly flexed position against stops on the end plate so as to automatically lock the platen in its operative position.

The machine shown is provided with automatic line spacing devices by which the platen is turned to advance the paper automatically when the carriage is drawn backwardly to its starting position. These parts are constructed as follows:—Mounted on the platen spindle R, is a ratchet or gear wheel, S, (Figures 1, 2, 4, 8, 9, 14, 15, 16, 17 and 18) the same being located on the outside of the adjacent end plate E^1 at the left hand side of the machine. Loosely mounted on said spindle, adjacent to said gear wheel is an oscillating feeding lever, S^1, which carries a loosely pivoted gravity pawl, S^2, of angular or bell-crank shape and provided with a tooth s^4 adapted for engagement with the teeth of said gear-wheel. Said pawl, S^2 is pivoted between its ends, by a pivot s, to the feed lever and has a limited oscillatory movement on said feed lever, limited by means of a stop pin s^1 on the lever engaging an elongated or segmented notch s^2 in the pawl. (Figure 17.) Said pawl also carries at its outer or free end an anti-friction roller, s^3, to which power is applied for moving the pawl and the feed lever. The feeding arm and pawl are moved or swung backwardly by means of a spring S^3, herein shown as made of coiled form and placed around the platen spindle, and are moved forwardly, or in a direction to feed the paper, by means of an endwise sliding cam S^4, which is mounted on the carriage and provided with an oblique or cam edge S^5 adapted to act on the anti-friction roller s^3 and thereby actuate both the feed arm and pawl. The feed pawl passes freely over the gear wheel in the backward movement of the feed lever; but in the forward movement of said lever under the action of the sliding cam S^4 the latter first moves the pawl to effect its engagement with the gear wheel, and thereafter moves the pawl and feed-arm bodily through a desired angular distance.

Provision is made for giving a variable line spacing by varying the distance to which the feed-arm is allowed to swing backward under the action of its actuating spring S^3, and in the construction illustrated, where provision is made for single and double spacing, said arm is adapted to strike and is arrested by a shoulder, s^5, on an arm R^5 (which is stationary with respect to the shaft R), to give a double spacing, while a movable stop s^6 having the form of a lever pivoted to the said arm R^5 is adapted to be swung into position to arrest the feed lever at half a stroke, and thus give a shorter movement to the same for single line spacing. The stop lever s^6 is shown as provided with a weighted upper end s^7, which, by being thrown to one side or the other of the pivot of the feed lever, acts by gravity to hold the stop lever either in its operative or inoperative position, said lever being shown in Figure 1 of the drawing in operative position and in Figure 8 as being out of action.

The platen and its spindle R being movable on the carriage frame, the arm R^5 is constructed to move with the spindle, and to afford support for said arm, it is rigidly attached to a sliding plate R^6 (Figure 16) which is located against the outer face of the carriage end-plate, and is provided with a bearing aperture r^2 which engages the said spindle R so that the sliding plate shall be moved with said spindle. In order to maintain the said plate R^6 constantly in the same position with respect to the feeding lever and other working parts, said lever is provided with a slot r^3 which is engaged by a stud r^4 secured in the end plate E^1, and which slides in said slot as the plate is moved. The arm R^5 is connected at its outer end with the plate R^6 by means of a transversely bent part r^5 (Figure 16) which supports the arm at some distance from and parallel with the plate R^6. The outer end of said arm is provided with an eye or bearing aperture r^6 which engages the spindle R outside of the ratchet wheel S (Figures 8, 11, and 15). Said arm is also provided with an outwardly extended or off-set part r^7 to the inner face of which the movable stop s^6 is pivoted. The transverse parts which join the said off-set part r^7 with the body of the arm form stops for limiting the swing of the pivoted, half space stop in both directions, and the lower edge of the transverse part nearest the

spindle also forms the shoulder s^5 which constitutes the stop for the feeding lever when a double space is desired. The feeding lever S^1 is shown as attached to a sleeve s^8, which surrounds the spindle R and extends outwardly therefrom for some distance to afford an extended bearing for the said lever on the shaft, adapted to withstand the outward pressure of the actuating cam S^4 on the extremity of said feeding lever. A brace s^9 extends from the end of said feeding lever to the outer end of said sleeve s^8 (Figure 15). The actuating spring S^3 of the feeding lever is conveniently arranged to surround the sleeve s^8, the outer end of said spring being attached to the outer end of the brace s^9 and the inner end of said spring being attached to the arm R^5, by insertion in a hole in the off-set part r^7 of said arm, as clearly shown in Figure 11. A part of the spindle R exterior to the end plate is preferably made of a separate short shaft r^8 to which the knob R^1 is attached. Said shaft r^8 is shown as attached to the outer end of the main part of the spindle R by means of a screw or other joint located outside of the sleeve s^8 (Figure 15). The usual spring pawl S^5 is provided for holding the platen spring from turning, said pawl being shown as provided with an anti-friction roller, s^{17}, which enters the spaces between the teeth of the gear wheel, so as to hold the same from turning except under a pressure sufficient to flex the spring of the pawl and allow the wheel to ride over the intervening teeth. Said pawl S^5 is shown as attached at its outer end to the transversely bent part r^5 of the arm R^4.

In order to enable the platen and the paper thereon to be turned or adjusted independently of the line-feeding devices, I propose to connect the ratchet wheel with the spindle R by means of a frictional connecting device or yielding connection adapted to allow the spindle R to be turned relatively to the said ratchet wheel. To this end, the wheel S consists of two parts, namely, an inner part S^6 which is rigidly attached to the spindle R, and an outer annular part S^7 which surrounds the inner part; said outer and inner parts having conical contact surfaces (Figures 7 and 15). The said conical contact surfaces are held in frictional contact by means of a flat spring S^8, which is secured by screws or otherwise to the central part S^6 and is provided with arms S^9, which overlap and bear against the outer part S^7; which latter is provided with a raised flange or rim (Figure 7) against which the ends of the spring rest and bear.

I have provided a locking device to hold the spring pawl S^5 positively engaged with the ratchet wheel, and thereby hold the same from turning, when it is desired to rotate the platen for adjusting the paper. For this purpose a swinging detent arm S^{10} (Figures 9 and 18) is pivoted on the spindle R, outside of and adjacent to the wheel S, and said arm is provided with a locking lug S^{11}, (Figure 11) adapted to engage the free end of the pawl S^5 and lock the latter from outward movement when engaged with the wheel S. As herein shown the said locking lug is adapted to engage the end of the pivot s^{12} of the roller, which pivot is constructed to project from the side of the pawl in position for engagement with said lug. The detent arm S^{10} is shown as provided with an outwardly extending finger piece S^{12} by which it may be more conveniently actuated, and also with a guide arm S^{13} which extends from the upper margin of the detent arm over and outside of the arm R^5 so as to hold and guide the detent arm in a vertical plane when it is swung or moved. The platen shifting devices above described are of obvious advantage, inasmuch as they enable the paper to be easily moved or shifted, by turning the platen, so as to locate the line of printing or individual letters (as in making corrections in previously printed matter) exactly at the desired point on the paper. For so shifting the paper, the detent arm S^{10} is lifted with the left hand to lock the pawl S^5 in the wheel S and the platen is then turned by the right hand applied to the knob on the platen spindle.

Now referring to the devices shown for actuating the sliding cam S^4 which gives motion to the line feed devices hereinbefore described, said cam is attached to an endwise movable rod S^{14} (Figures 4, 5, 12 and 14) mounted in guide lugs E^7 E^8 which project rearwardly from the rack bar E^2 and herein shown as formed by integral, outwardly bent lugs on the ends of the plate E^6 (Figures 5 and 12). The

rod S^{14} is held normally in its retracted position by means of a coiled spring S^{15}, located between the lug E^7 and a collar, s^{14}, attached to said rod. A second spring S^{16} is also placed upon said rod between said collar s^{16} and a second sliding collar s^{15} located on the rod S^{16}, in position to engage the inner face of the right hand bearing lug, E^8; said spring S^{16} and sliding collar s^{15} together forming an elastic stop or buffer for limiting the inward or backward movement of the rod S^{14} under the action of the spring S^{15}. The rod S^{14} is actuated by the contact of its rear, or right hand end, with a suitable stop on the carriage supporting frame, which stop, inasmuch as it acts to limit the rearward movement of the carriage in returning to its starting point, serves also as a margin stop for the carriage, by which the width of the margin left on the sheet in printing is determined. As an improved construction in such margin stop, the same is constructed as follows:—

A sliding block T, is mounted on the right hand end of the guide-bar F, as seen in Figures 20, 21, 22 and 23. Said block is held upon the said guide bar by means of a U-shaped clip or slide T^1, which embraces the top, bottom and front sides of the guide-bar, and is pivoted to the said block T, which is located at the rear face of the bar, by means of a vertical pivot pin, t, which is inserted through the block at the left hand side of the same (Figure 21). At the opposite side or right hand end of the block is located a holding pin, t^1, (Figure 23) which is adapted to engage either one of a series of holes t^2 in the bar. The said pin is inserted in and released from the said holes by swinging the block T on the pivot t. A spring t^3 secured in the block and bearing against the bottom of the groove F^7 of the guide bar, tends to hold the pin in engagement with the recesses therein. The rod S^{14} is arranged to pass freely over the block T, and mounted in the said block is a movable detent T^2 which is arranged to be moved laterally into and out of the path of the pawl of the rod S^{14}. Said detent, as shown, consists of a flat plate inserted in a slot formed transversely in the block T and mounted on a pivot pin t^3 inserted through the lower part of the block, the upper end of the detent standing in position to engage the end of the rod unless said detent shall be especially moved to shift it out of the way of said rod. As a simple and convenient construction, I have provided said detent T^2 with a weighted and bent arm, t^4 which extends forwardly beneath the guide-bar T and which tends to hold the upper end of the detent in position to engage the said rod; a suitable stop t^5 being provided to limit the inward movement of the detent under the weight of said arm t^4. When it is desired to throw the detent out of operative position, it is merely necessary to lift the weighted arm t^4 by the hand, when the rod S^{14} will pass the detent without striking the same. When the said detent is thrown out of action, a stop for the carriage is provided by means of a projecting pin or stud T^3, on the block T, which is located in position for engagement with the bearing lug E^7 on the carriage.

A forwardly projecting cam arm E^9 on the carriage frame serves to throw outwardly the detent T^2 out of the path of the rod S^{14} after the sliding cam has been moved to turn the platen so as to allow the said rod and the cam to be restored to its rearward position by the action of the spring S^{15} and to permit the platen feeding arm S^1 to also return to its rearward position before the carriage reaches the extreme limit of its movement. The said feeding arm and sliding arm are thus operated, to turn the platen for the line feed, by the act of returning the carriage to its starting point, so that no movement of the platen actuating devices takes place in the subsequent forward movement of the carriage under the action of the carriage actuating spring, and the forward movement of the carriage is in no way affected by the expansion of the spring S^{15}.

In connection with the platen E, is employed a feed-roll U, (Figures 4, 10, 11 and 12) which is mounted on a shaft or spindle U^1, which extends beyond the end plates of the carriage frame and is provided with a pinion u intermeshing with a gear wheel U^2 on the platen spindle R. The shaft U^1 is mounted in the ends of the arms u^1 u^1 attached to a supporting strip U^3 which extends across the front of

the carriage and is pivotally supported at its ends in the end plates E^1 of the carriage frame by means of pivot pins or projections u^2 on the ends of the strip U^3. A spring or springs u^3 are applied to act upon said strip U^3 so as to turn the same in a direction to carry the feed-roll toward the surface of the platen. Said spring u^3 is herein shown as made of coiled form and arranged to surround the pivots u^2 of said strip U^3. The said strip U^3 is shown as constructed to form the scale by which to determine the position of the point at which the types strike in printing. When the feed roller is shifted rearwardly out of its operative position for the purpose of inserting the paper in the carriage; the gear wheel U^2 becomes disengaged from the gear pinion u, but is re-engaged therewith when the platen is restored to its operative position. The end plates of the carriage are arranged to form stops for contact with the shaft U^1, to limit the inward or rearward movement of the feed roller under the action of the springs u^3; said feed roller being moved a short distance so that its shaft will be out of contact with said end plates, when the platen is brought against the feed roll in restoring it to its working position.

With respect to the means used on the paper carriage for guiding the paper during its insertion, and at other times, the machine shown is provided with devices as follows: E^{10} (Figure 12) is the upper and E^{11} the lower paper guide, both made of sheet metal in the usual manner. The lower paper guide is supported at its forward end by attachment to a longitudinal rod e^3, located adjacent to the rear edge of the rack bar E^2. Said rod e^3 also affords pivotal support for supporting arms e^4 which are located near opposite ends of the platen and which carry, adjacent to the front surface of the platen, pressure rollers e^5, which are mounted on a shaft e^6 having bearings at its ends in eyes e^7 on the arms e^4. Said shaft e^6 engages at its end an intermediate arm e^8 which is also mounted to turn on the rod e^3, and a spring e^9 coiled about the rod e^3 and engaging the said arm e^6 operates to turn said arm in a direction to carry the rollers e^5, toward the surface of the platen. Attached to the arms e^4 are tilting paper guides e^{10} which, when the platen is at the rearward limit of its movement rest, at their free ends in contact with the lower paper guide E^{11}; the said paper guides at such time being in position to guide the entering edge of the paper around the platen and past the adjacent parts.

V, V (Figures 1, 3, and 25) are the ribbon spools which are mounted on upright shafts v v located on the type-bar supporting frames D outside of the type bars; said spools being so arranged that the ribbon extends over the platen and through the several loop-shaped type bars. The inclined supports D^4 are forked at their lower ends to afford space for the passage of the ribbon, as clearly seen in Figure 2.

Secured to each spool V, below the same, is a gear wheel V^1 which is adapted for engagement with a gear pinion v^1 on a shaft V^2. The lower end of the shaft V^2 is mounted in a step or bearing in the base plate A, while its upper end is adapted for insertion in either one of two bearing notches v^2 v^3 formed in the plate D. Said step or bearing V^{14} (Figure 42) is so shaped as to afford universal lateral movement in the upper end of the shaft V^2. The said notches are so arranged that when the upper end of the shaft is placed in one notch v^3 it will be engaged with the gear wheel, but when placed in the other notch v^2 it will be free from said gear wheel. Said bearing notches are held closed by means of a spring strip v^4 (Figures 15 and 43) which is conveniently formed by means of a single strip of spring metal secured at one end of the plate D, and which is held or guided in its movement by means of a stud v^5 (Figure 42) provided with a head which forms a stop to limit the outward movement of the free end of said spring strip. Both of the ribbon spools are provided with similar driving connections and it follows that the two driving shafts V^2 may both be shifted at the same time, one into and the other out of engagement with its corresponding spool, so that the direction of the motion of the ribbon may be easily and quickly reversed as soon as one spool is filled and the other empty.

For actuating the shaft V^2 I provide a simple pawl and ratchet device consisting of a ratchet wheel V^3, located at the lower ends of the said shaft (Figures 3 and 24) and having upwardly facing teeth. Upon the frame standards D^1 are located bell crank levers V^4 having depending arms connected at their lower ends with pawls v^6, the free ends of which rest on and are adapted to engage the ratchet wheels V^3. The horizontal arms of said bell crank levers extend forward and engage the ends of the spacing bar O (Figure 1) so that upon the depression of each key lever, the said pawl will be operated and the shafts V^2 thereby turned.

The said ribbon spools V, illustrated, contain improved features of construction as follows:—Each of said spools consists of a central barrel and two heads or ends. The barrel part V^5 of the spool (Figure 34) is made of a piece of sheet metal having parallel edges and the heads or ends V^6 (Figure 35) are provided with annularly arranged perforations V^8, through which prongs v^7 on the barrel part are adapted to extend. When the piece of sheet metal forming the barrel is bent into cylindric form, the said prongs v^7 are inserted through said apertures (Figure 44) and then bent down against the outer surface of the heads to secure the latter to the barrel. In order to provide means for fastening the ends of the ribbon to a barrel, made as described, I provide the strip which forms the barrel with a pointed or V-shaped projection v^9 (Figures 34 and 45) arranged to extend opposite an opening or notch v^{10} cut in the opposite end of the strip and forming a free projection or spur over which the end of the ribbon may be hooked; the end of the spur being bent down into the notch to hold the ribbon against detachment.

The gear wheels V^1 as shown and preferably constructed are mounted loosely on the shafts v, v, above the plates D, and are adapted for detachable connection with the ribbon spool by means of studs v^{11} in the upper surfaces of the wheels, which enter correspondingly located holes v^{12} (Figure 35) in the lower heads or discs of the spools. The spools rest by gravity on the gear wheels, felt washers v^{13} (Figure 24) being preferably placed between the gears and spools to deaden the sound. The studs v are shown as provided with milled heads (Figure 1) and they conveniently have screw-threaded connection at their lower ends with the plates D so that the spools may be easily removed and replaced by unscrewing the studs from the said plates.

The inking ribbon is provided with guides adjacent to the printing point, which guides are adapted to hold the ribbon adjacent to the paper at the time the impression is made and are moved to throw or lift the ribbon away from the paper and thus render visible the impression made after each letter is printed. For actuating the said ribbon guides, I propose to employ a construction, shown in Figures 24, 29 and 33, as follows: Pivoted to rigid supporting arms W W which are attached to the shifting carriage frame, conveniently by means of a standard W^1 attached to the upturned forward end of the bar F^6, is a rock shaft W^2 arranged parallel with and above the platen and carrying two depending arms, w w connected by a cross bar W^1 and to the lower ends of which are attached two ribbon guides or loops w^1 w^1 one of which is arranged at either side of the printing point; said loops being arranged to stand, when in working position, horizontally and beneath the pivotal axis about which they swing. (Figure 33.) The said cross bar is bent downwardly or deflected so as to come below the level of the type heads as they strike downwardly on the platen. To give motion to the said rock shaft and the loops carried thereby the rock shaft is provided with a rigid arm w^3 to which is pivoted the upper end of a connecting rod W^3 which is connected at its lower end with a part which is actuated by all of the key levers of the machine, in the instance shown one of the bars O^3 attached to the space bar O, so that the rock shaft is moved and the ribbon guides oscillated each time an impression is made. The loops w^1 w^1, stand normally remote from the platen and are swung into position adjacent to or over the same at the time the keys are depressed. The pivotal axis of the loops or guides is so arranged with respect to the same and to the platen

that the loops stand normally in a position forward of the platen or at the side of their pivotal axis adjacent to the operator and in an inclined or oblique direction so that the ribbon stands edgewise to the line of vision as the operator looks toward the platen on which the paper rests. By this arrangement of the ribbon guides the ribbon is held in such position as to avoid obstruction to the vision at all times, except when the impression is being made, while at the same time a very short or slight movement of the ribbon guides is required to bring the ribbon into its operative position.

On the rear frame bar E^3 of the carriage is located an adjustable line stop combined with a bell actuating stop which is constructed as follows: X (Figures 18 and 19) is a slide which is mounted on the said bar E^3, and is provided with a spring arm X^1 extending longitudinally of the bar and carrying a stud x adapted for engagement with either one of a series of holes x^1, formed in the top surface of said bar E^3. Said slide X is provided at the rear side of the bar with a stop projection X^2, which is adapted for contact with the standard H^1, by which the supporting roller H for the rear of the carriage is supported. The said slide also carries, below the bar, a pivoted bell-actuating stop X^3, having the form of a bell crank lever and provided with a depending arm which is adapted to engage the upper end of a bell hammer lever Y, which is located in the path of said arm; the horizontal arm being arranged to bear against the under surface of the bar E^3, so as to hold the lower arm rigid when the latter strikes the bell hammer lever in the movement of the carriage from right to left, while permitting the said lower arm to yield backwardly and pass over the said lever in the return movement of the carriage. The bell-crank lever Y is shown as pivotally mounted on a standard Y^1 and as provided at its lower end with a hammer y adapted for contact with a bell Y^2, attached to a horizontal supporting arm Y^3, which is secured to a bracket F^3 on the rear part of the machine frame.

Having now particularly described and ascertained the nature of my said invention, and in what manner the same is to be performed, I declare that what I claim is:

1. In a typewriter, looped or U-shaped type-bars of varying lengths, carrying typeheads on their closed or looped ends, which type heads are heavier on the shorter than on the longer bars and are graduated in weight according to the lengths of the type-bars, substantially as described.

2. The combination with a carriage and a shifting frame for supporting the same, of rocking standards for supporting said frame, said standards having curved end bearing surfaces provided with longitudinal grooves, and flat sheet metal shoes, the edges of which engage said grooves; said shoes having at their ends projecting parts which engage the opposite ends of the bearing surfaces to hold the standards from shifting on the shoes, substantially as described.

3. The combination with a paper carriage, of spacing mechanism comprising a rack on the carriage, a shaft carrying a pinion adapted to engage said rack, and an escape mechanism embracing an escape wheel which is mounted on the shaft at a point remote from the pinion; the end of said shaft which carries the pinion being constructed to swing toward and from the rack about an axis of oscillation adjacent to the escape wheel, whereby the pinion may be engaged with and disengaged from the rack without disconnecting the escape wheel from the other parts of the escape mechanism, substantially as described.

4. The combination with a paper carriage, of a spacing mechanism comprising a rack on the carriage, a revolving shaft carrying a pinion which engages the rack, and an escape mechanism embracing an escape wheel which is mounted on the shaft at a point remote from the pinion; the end of said shaft which carries the pinion being movable toward and from the rack about an axis of oscillation adjacent to the escape wheel, a spring acting on the shaft to throw the pinion toward the rack and a releasing bar arranged to act on the shaft to release the pinion from the rack, substantially as described.

5. The combination with a paper-carriage, of a spacing mechanism, comprising a rack on the carriage, a revolving shaft carrying a pinion which engages the rack, and an escape mechanism embracing an escape wheel which is mounted on the shaft at a point remote from the pinion; the end of said shaft which carries the pinion being movable toward and from the rack about an axis of oscillation adjacent to the escape wheel, and a releasing bar arranged parallel with the rack and adapted to act on the said shaft to hold the same free from the rack, said shaft being provided with an anti-friction roller adapted to engage the releasing-bar, substantially as described.

6. The combination with a paper-carriage, of a spacing mechanism comprising a rack on the carriage, a revolving shaft carrying a pinion which engages said rack and an escape mechanism embracing an escape wheel which is mounted on the shaft at a point remote from the pinion, the end of the shaft which carries said pinion being movable toward and from the rack about an axis of oscillation adjacent to the escape wheel, a releasing bar on the carriage, arranged to act on the shaft to hold the pinion free from the rack and an actuating device for said releasing bar, comprising an endwise sliding trip-rod mounted on the carriage, and a bell-crank lever mounted on the carriage for transmitting motion from the trip-rod to the said releasing bar, substantially as described.

7. The combination with a paper-carriage, of a horizontally movable shifting frame for supporting said carriage, and a spacing mechanism comprising a rack on the carriage, an upright shaft mounted on the shifting frame and provided with a pinion at its upper end adapted to engage said rack, said upper end of the shaft being movable toward and from the rack, an escape wheel on the lower end of the shaft, an escapement lever mounted on the shifting frame so as to swing in a vertical plane and provided with stiff and limber pawls which engage the escape wheel, and a vertically movable spacing bar having slotted connection with the said escapement lever permitting the escapement lever to retain its operative connection with the spacing bar when moved with the shifting frame, substantially as described.

8. The combination with a platen shaft, of a ratchet wheel thereon, consisting of inner and outer parts having conical contact surfaces and a spring applied to hold said surfaces in contact with each other, substantially as described.

9. The combination with a platen, a ratchet wheel and a holding pawl engaging the ratchet wheel, of a frictional connection between the ratchet wheel and platen and a locking detent adapted to engage said pawl for holding it positively in engagement with the ratchet wheel, whereby the latter is held from turning, substantially as described.

10. The combination with an endwise movable carriage and a revolving platen thereon, of automatic line spacing mechanism, comprising a ratchet wheel on the platen shaft, a sliding cam on the carriage, an oscillating feeding arm mounted on the carriage, and a feed pawl pivoted to the arm and adapted to engage the ratchet wheel and also to engage the said sliding cam, substantially as described.

11. The combination with an endwise movable paper carriage and a revolving platen thereon, of automatic line spacing mechanism, comprising a ratchet wheel on the platen shaft, a sliding cam on the carriage, an oscillating feeding arm which is actuated by the sliding cam and carries a pawl which engages the ratchet wheel, a stationary pawl stop on the carriage giving a maximum line space, and a pivoted gravity actuated stop for giving a less extent of line feed, substantially as described.

12. The combination with an endwise movable paper-carriage and a guide bar for the same, of an automatic line spacing device, a sliding rod on the carriage for actuating the same, and a stop for actuating said rod, comprising an adjustable slide on the guide-bar, and a movable stop plate on said slide, adapted to actuate the sliding rod, substantially as described.

13. The combination with a carriage guide-bar, of a margin stop comprising a slide and a block pivoted to the slide and provided with a holding pin adapted to

engage one of a series of holes in the guide bar, said pin being located in the block at a distance from the pivotal point of the same, so that it may be engaged with and disengaged from the said guide bar by the swinging of said block on its pivot, substantially as described.

14. The combination with an endwise movable carriage and a revolving platen thereon, of automatic line-spacing mechanism comprising a ratchet wheel attached to the platen, a sliding cam on the carriage, an oscillating feeding arm which is actuated by the sliding cam, a spring actuating the cam, a stop on the carriage movable into and out of position for engagement with the said cam, and a cam plate on the carriage adapted to actuate said stop for releasing the cam plate after the same has been actuated to turn the platen, substantially as described.

15. The combination with a paper-carriage and a platen movable upon the carriage into and out of its operative position, of a feed roller the shaft of which extends at its ends past the end plates of the carriage frame, yielding arms affording bearings for the feed-roller shaft, a gear-wheel on the platen shaft outside of the carriage frame, and a pinion on the feed-roller shaft adapted to intermesh with said gear wheel; the ends of said feed-roller shaft being adapted for contact with the carriage end plates so as to limit the inward movement of the feed-roller, substantially as described.

16. The combination with the platen and space bars of a type-writing machine, of pivotal supports above the platen, ribbon guides carried by said supports and arranged to swing between the axis thereof and the center of the platen, and connections between the pivotal supports and space bars, constructed and operating to move the ribbon guides into alignment with and between the axial centers of the platen and pivotal supports upon operation of said space bars, substantially as described.

17. A ribbon feeding mechanism comprising a spool, a gear wheel connected with the same and a driving shaft provided with a pinion adapted to intermesh with said gear wheel, and having lateral movement at its end which carries the pinion about an axis of oscillation located at a distance from said pinion, a bearing for the end of the shaft adjacent to said gear-wheel, provided with two open bearing notches or recesses at different distances from the gear wheel, in either of which recesses the movable end of said shaft may be placed, and a spring actuated strip or bar for holding the shaft in either of the said recesses, substantially as described.

18. A ribbon spool for typewriters consisting of two heads, and a sheet metal barrel attached thereto and formed of a flat strip of metal provided at one end with a notch and at its opposite end with a projection, said strip being bent into cylindric form with the projection on one end of the strip occupying the notch in the other end thereof to form a ribbon holding device, substantially as described.

Dated this 16th day of June 1896.

HASELTINE, LAKE & Co.,
45 Southampton Buildings, W.C., Agents for the Applicant.

London: Printed for Her Majesty's Stationery Office, by Darling & Son, Ltd.—1896

A.D. 1896. Feb. 12. Nº 3205.
OLIVER'S Complete Specification.

(8 SHEETS)

SHEET 2.

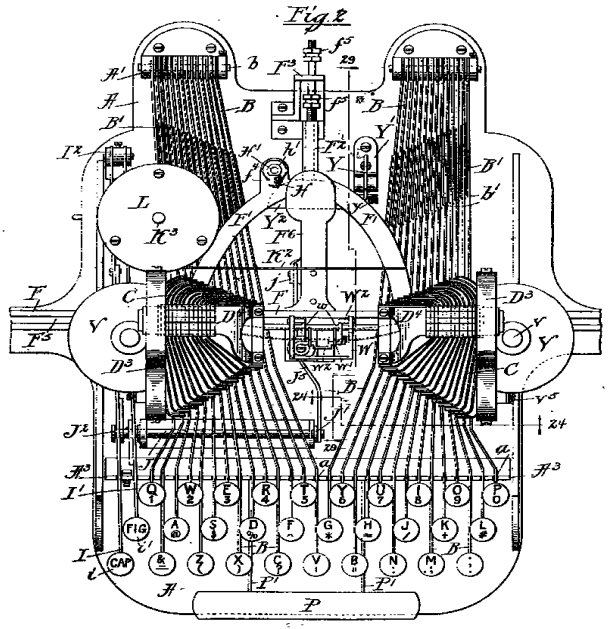

SHEET 1

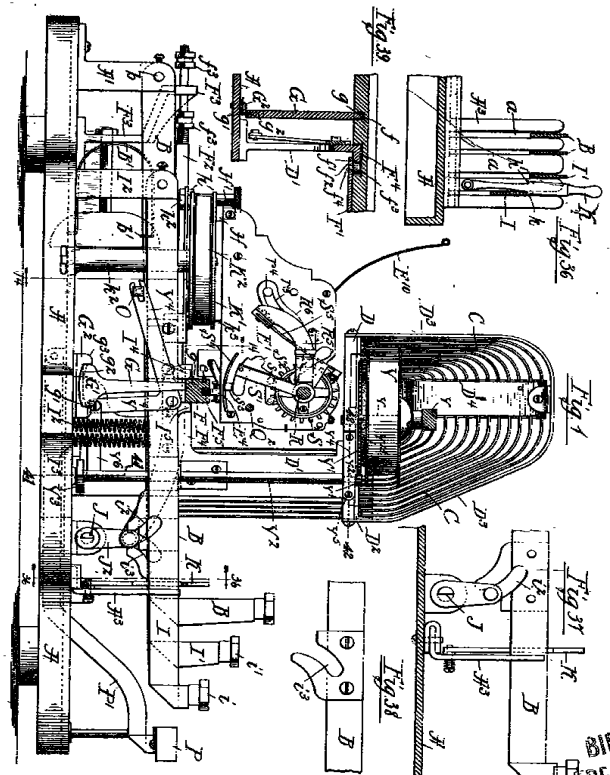

[This Drawing is a reproduction of the Original on a reduced scale.]

London: Printed by Harrison and Sons Ltd. for Her Majesty's Stationery Office 1896

Malby & Sons, Press-Litho.

Fig. 2.

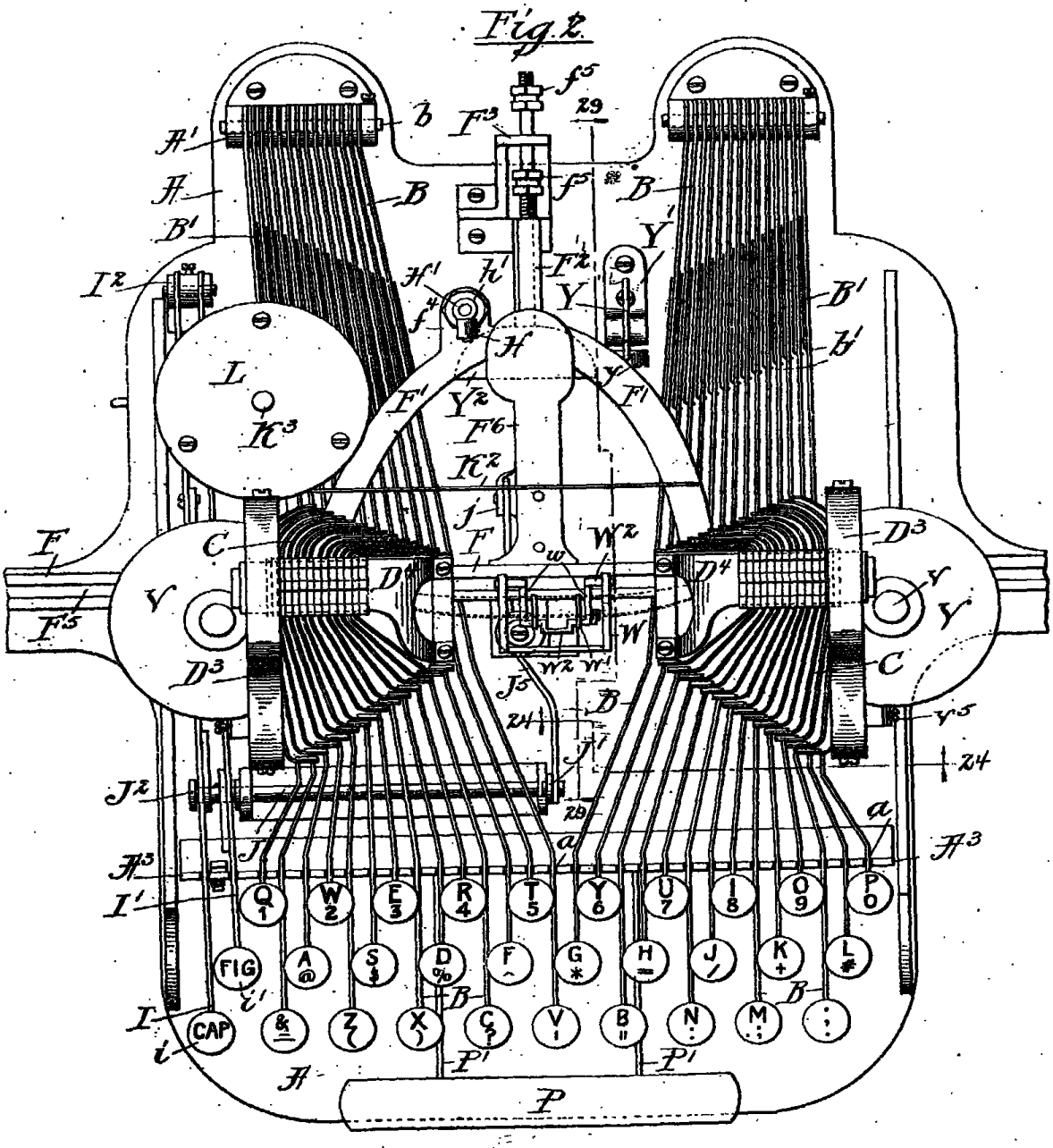

London. Printed by
for Her Majesty's Stationery

[This Drawing is a reproduction of the Original on a reduced scale.]

(8 SHEETS)

SHEET 1.

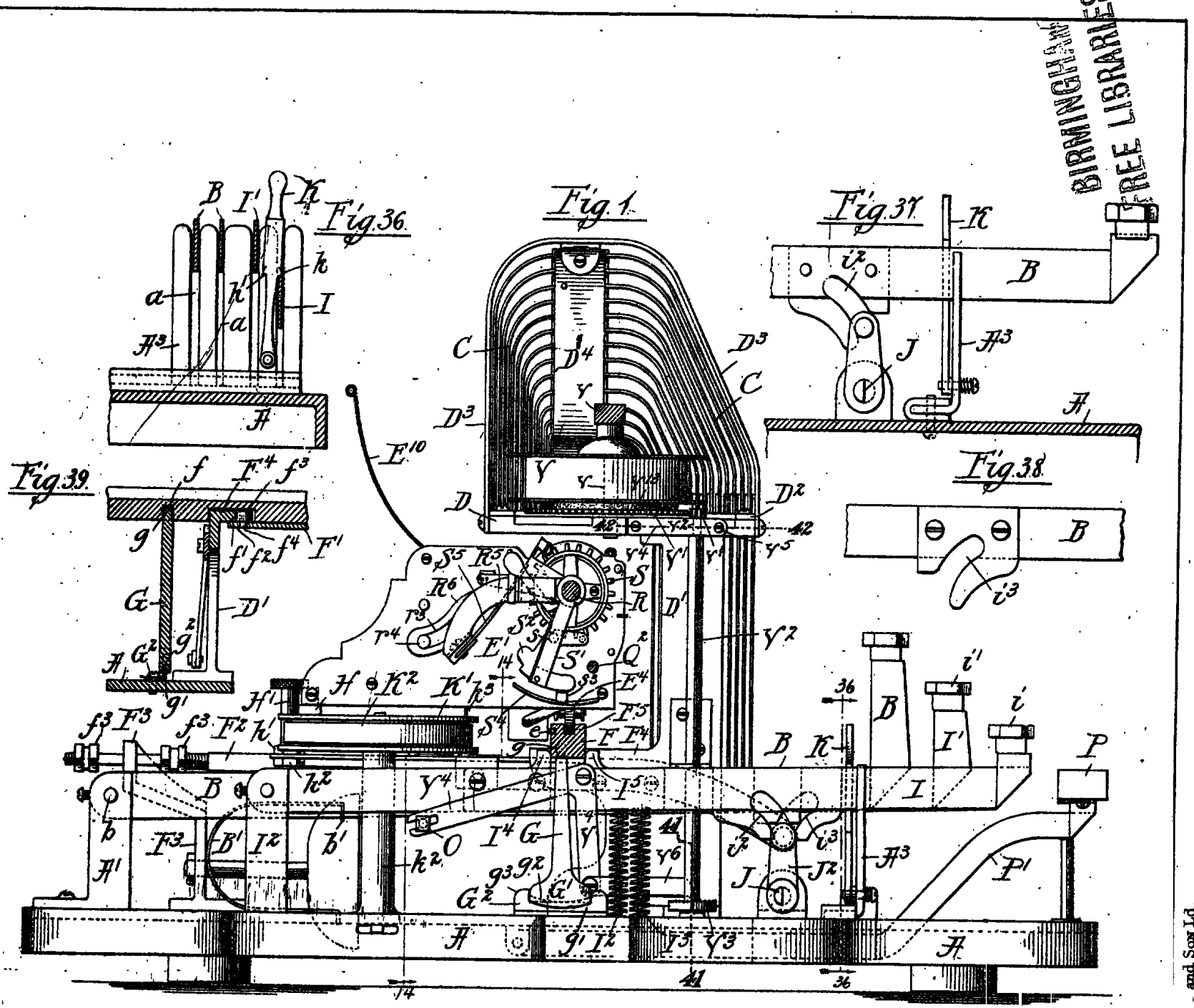

Malby & Sons, Photo-Litho.

and Sons Ltd.
1896.

SHEET 3.

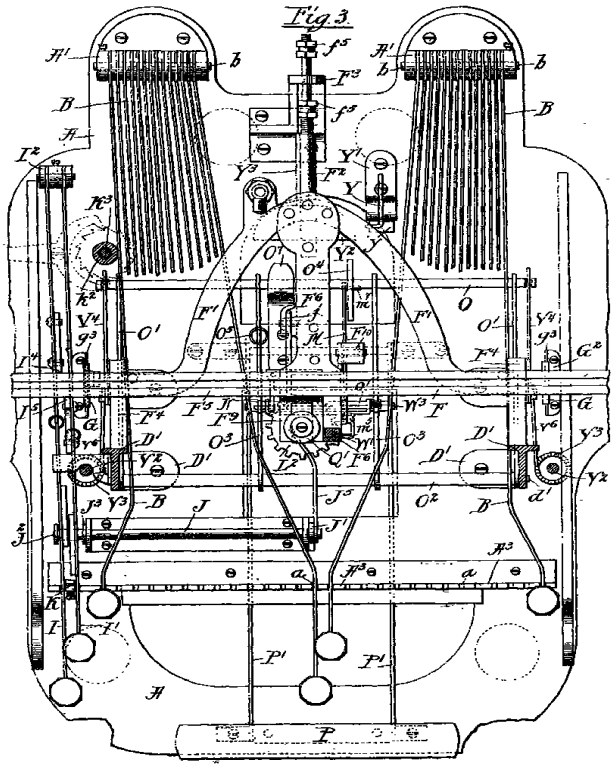

SHEET 4.

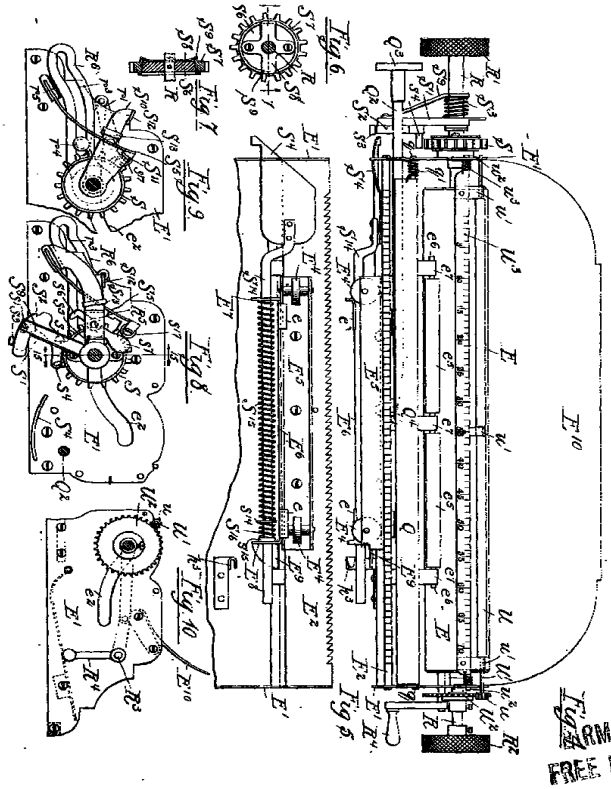

[This Drawing is a reproduction of the Original on a reduced scale]

London: Printed by Darlitre and Son Ld.
for Her Majesty's Stationery Office. 1896
Malby & Sons, Photo-Litho

SHEET 3.

Fig. 3.

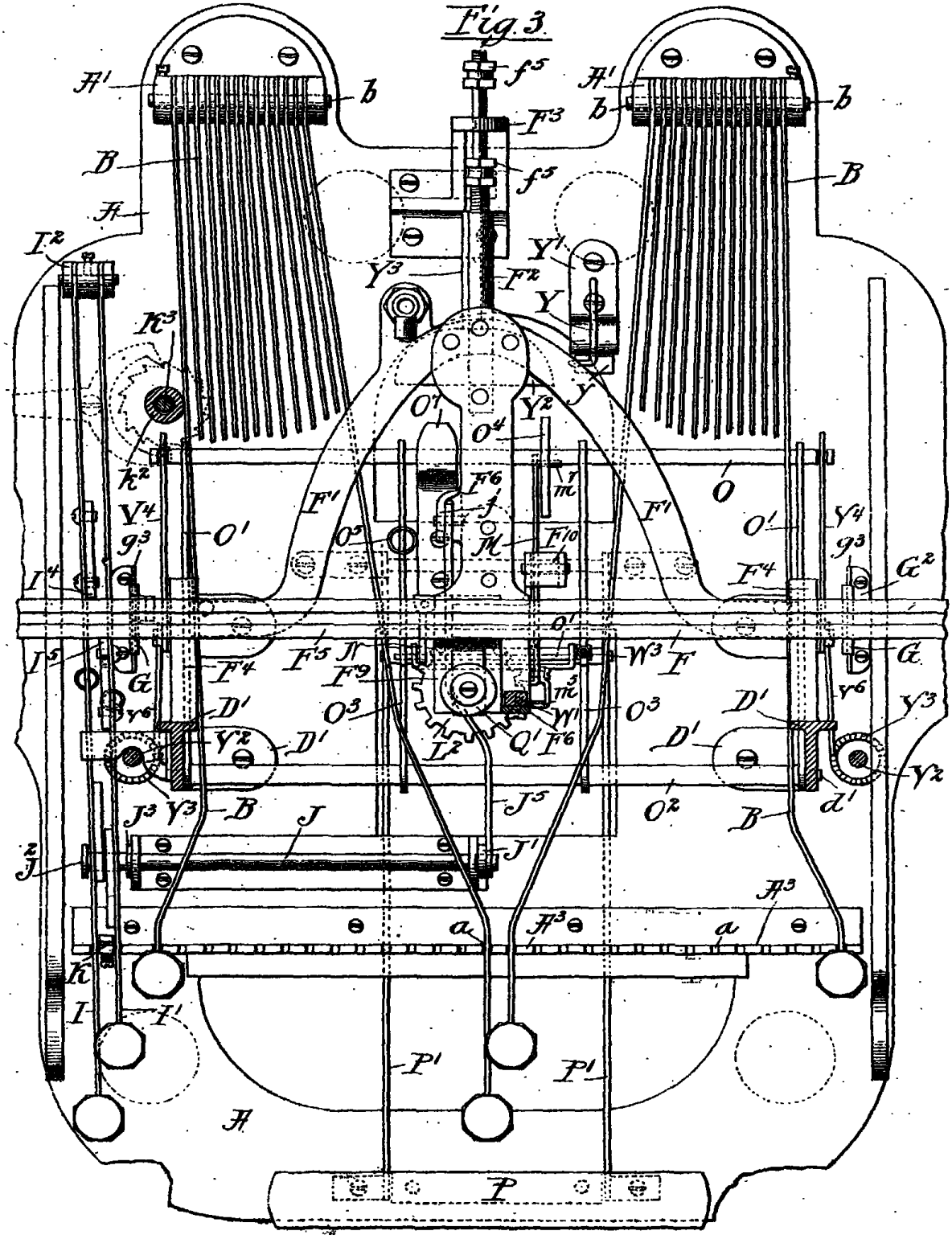

London: Printed by Darling and
for Her Majesty's Stationery Office.

[This Drawing is a reproduction of the Original on a reduced scale]

(8 SHEETS)

SHEET 4.

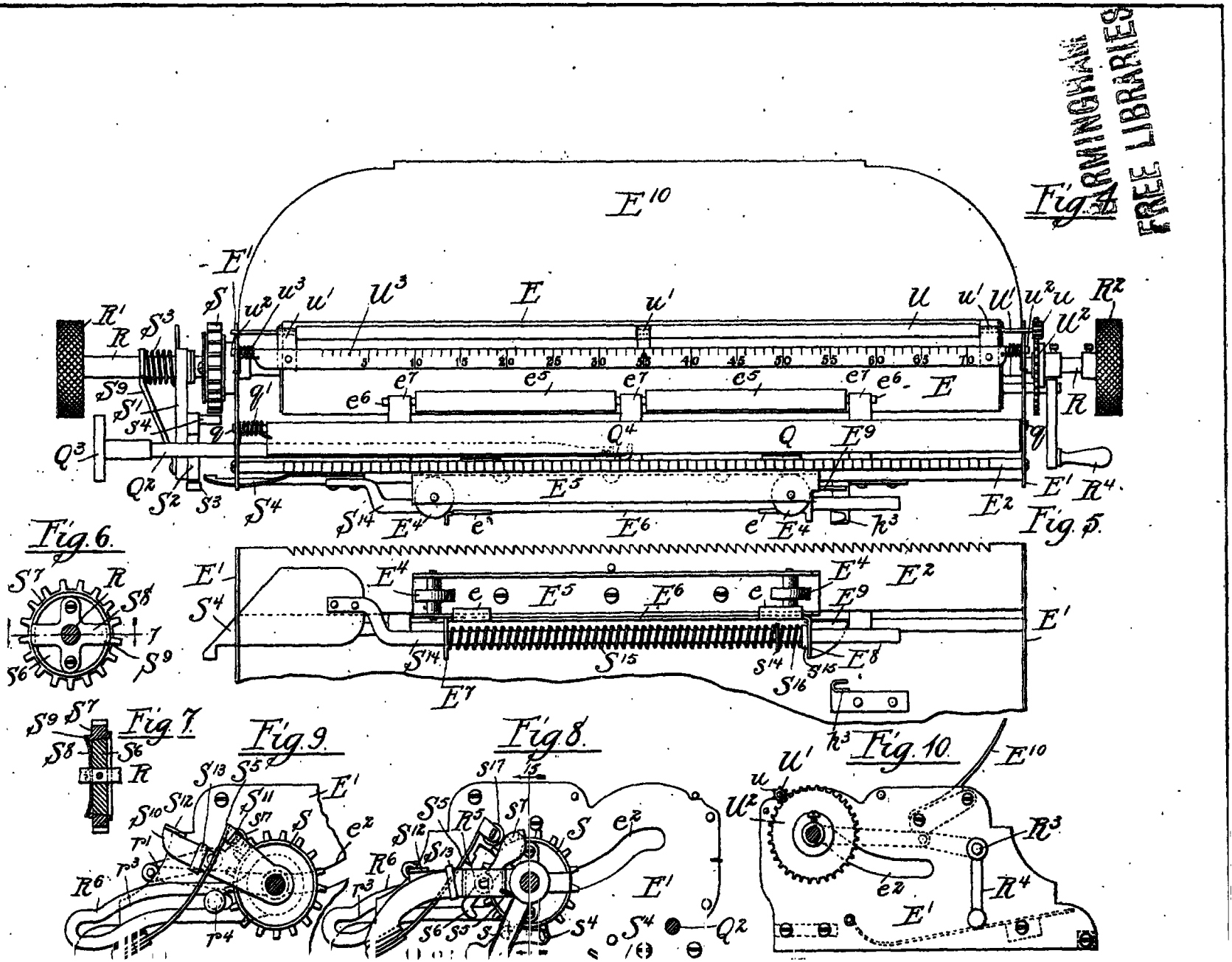

Malby & Sons, Photo-Litho

A.D. 1896. Feb. 12. N° 3205.
OLIVER'S Complete Specification.

(8 SHEETS)

SHEET 6.

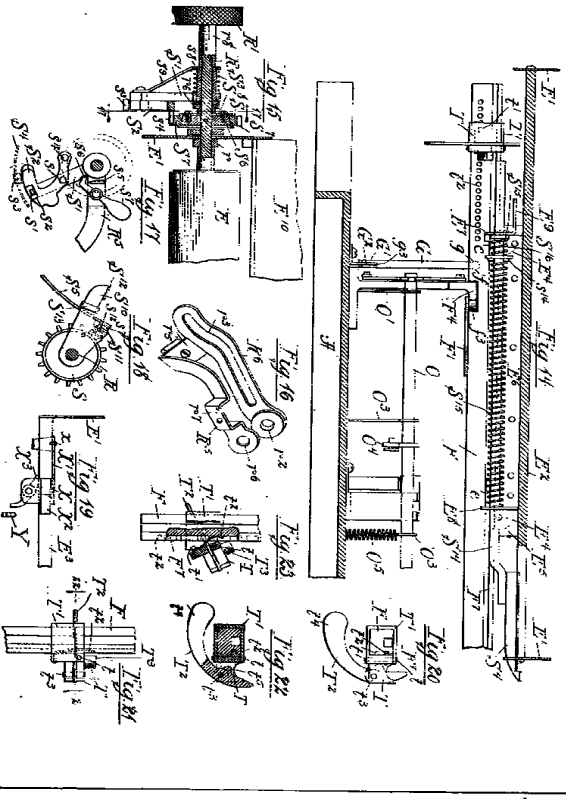

SHEET 5

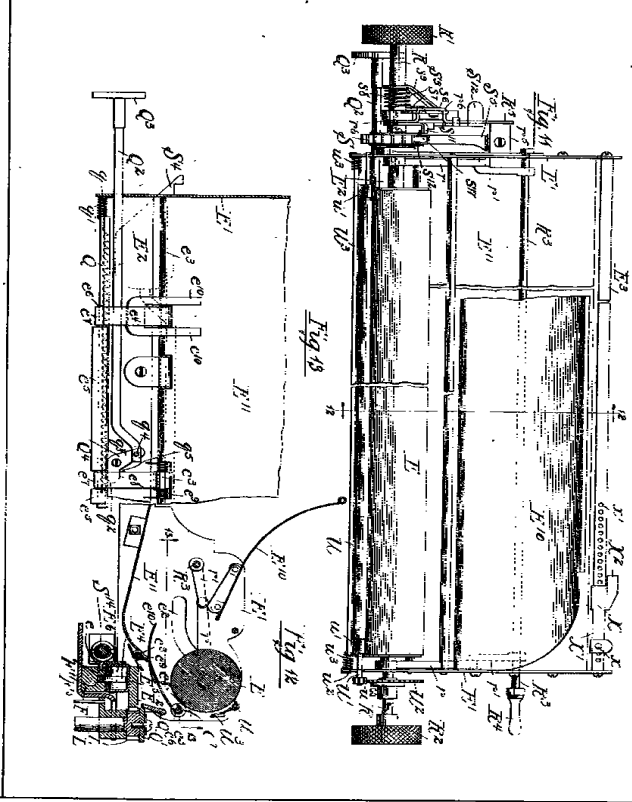

[This Drawing is a reproduction of the Original on a reduced scale.]

London: Printed by Darling and Son Ltd.
for Her Majesty's Stationery Office 1896

Malby & Sons Photo-Litho.

SHEET 6.

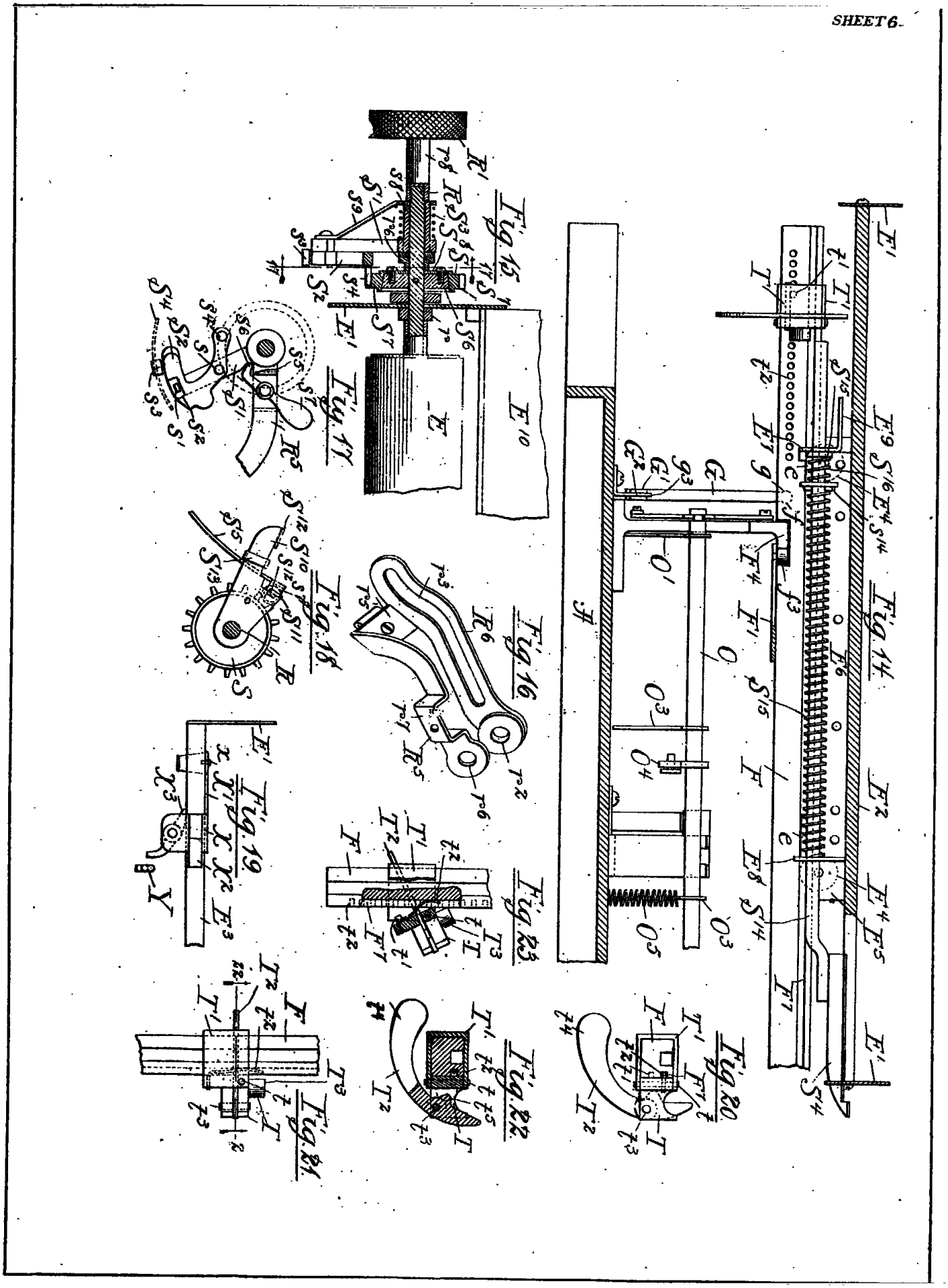

London: Printed
for Her Majesty's

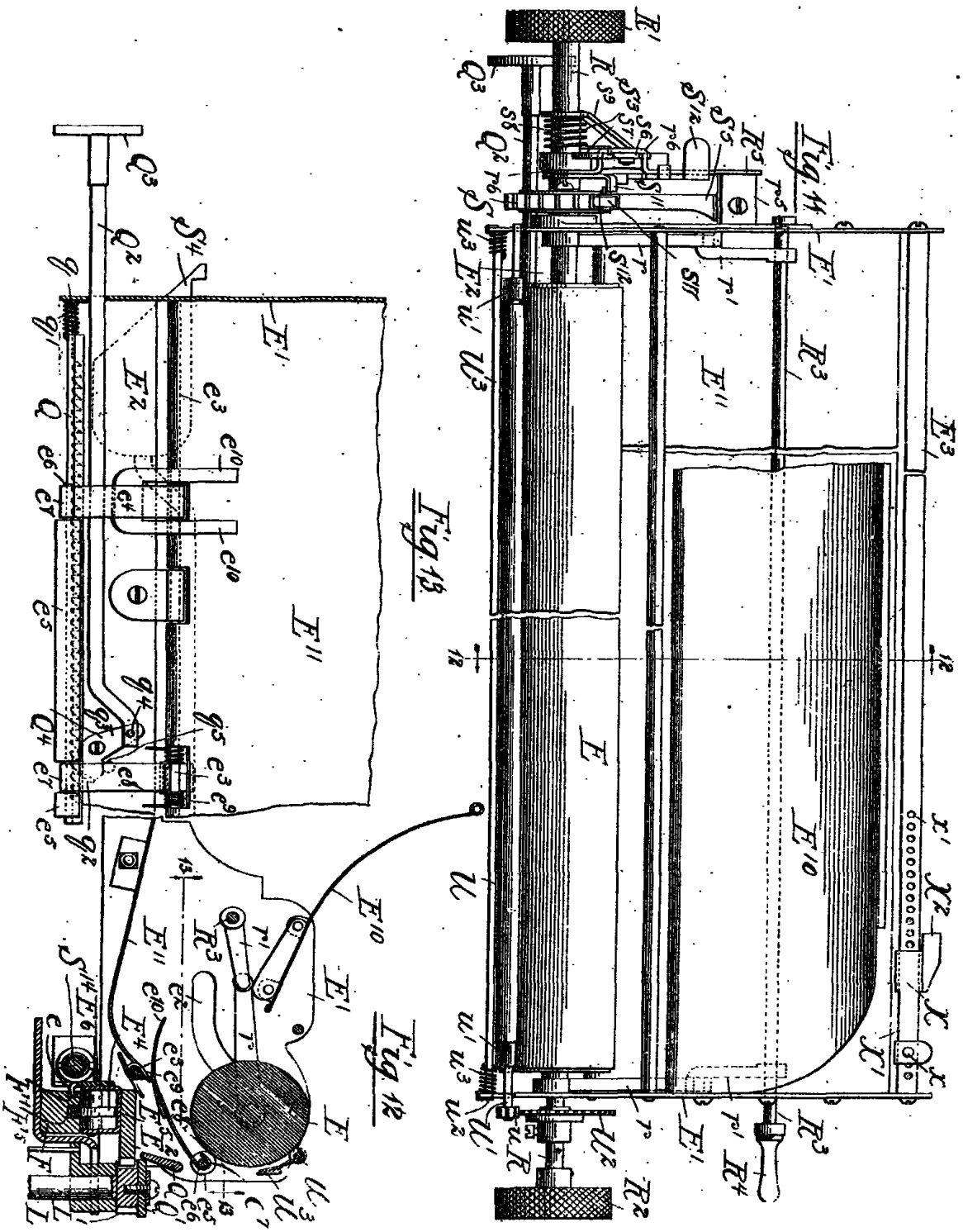

[This Drawing is a reproduction of the Original on a reduced scale.]

Darling and Son Ltd.
Office. 1896.

Malby & Sons, Photo-Litho.

SHEET 8

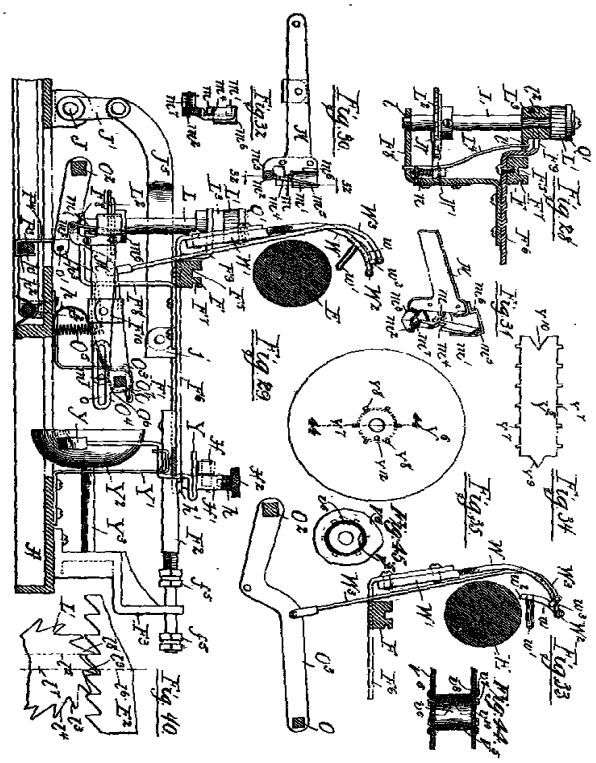

SHEET 7

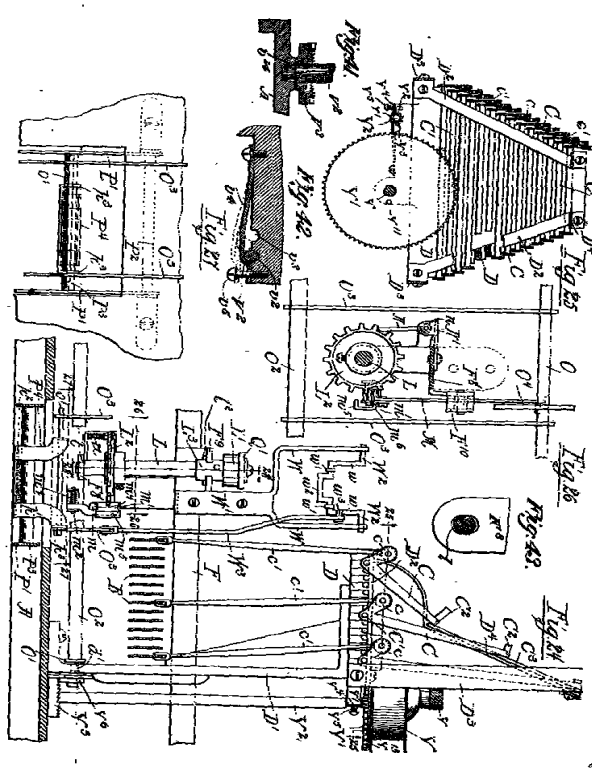

[This Drawing is a reproduction of the Original on a reduced scale.]

London: Printed by Darling and Son Ld.
for Her Majesty's Stationery Office. 1896.

Malby & Sons Photo-Lith.

SHEET 8.

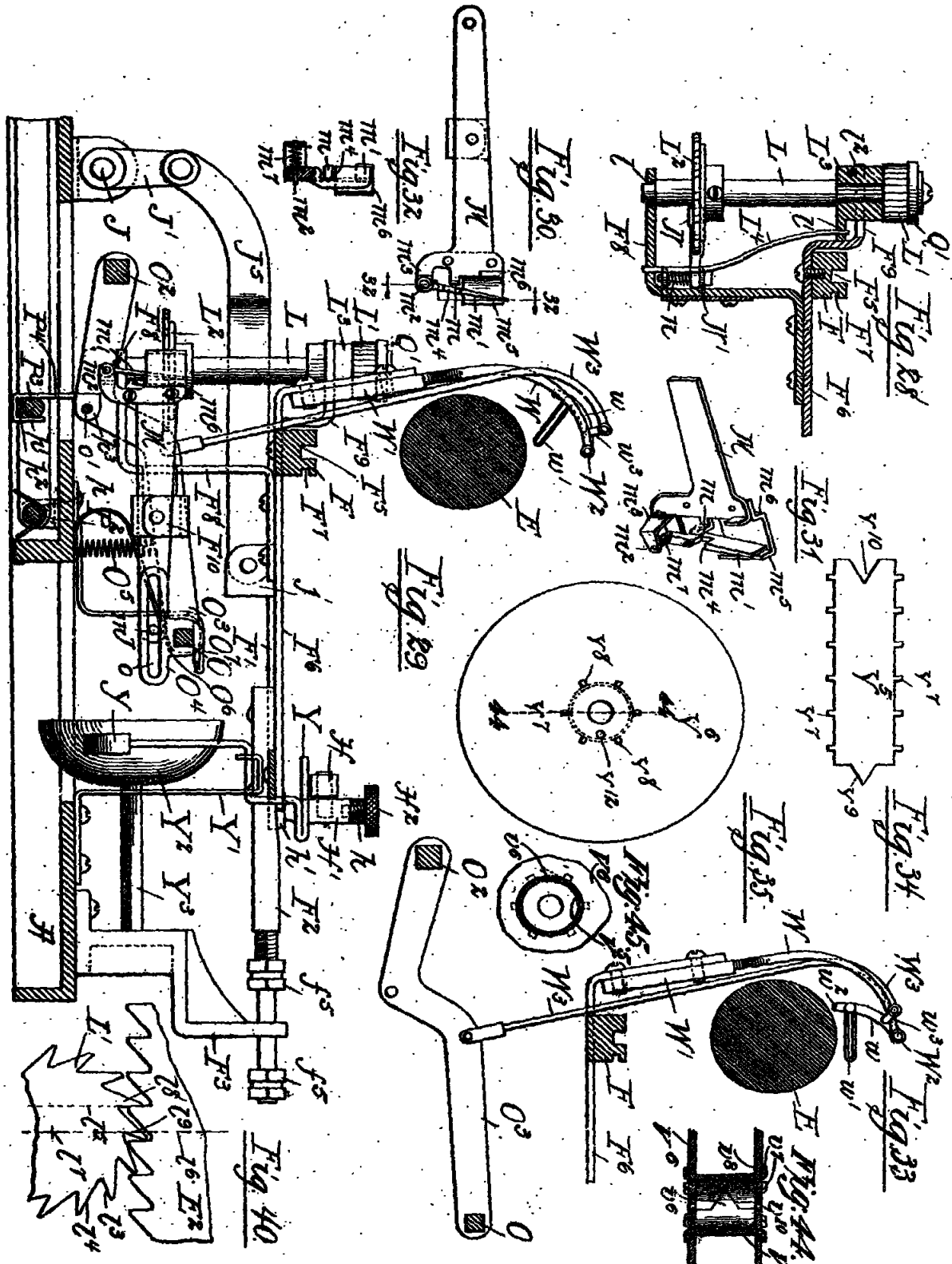

London: Printed b
for Her Majesty's Sta

SHEET 7.

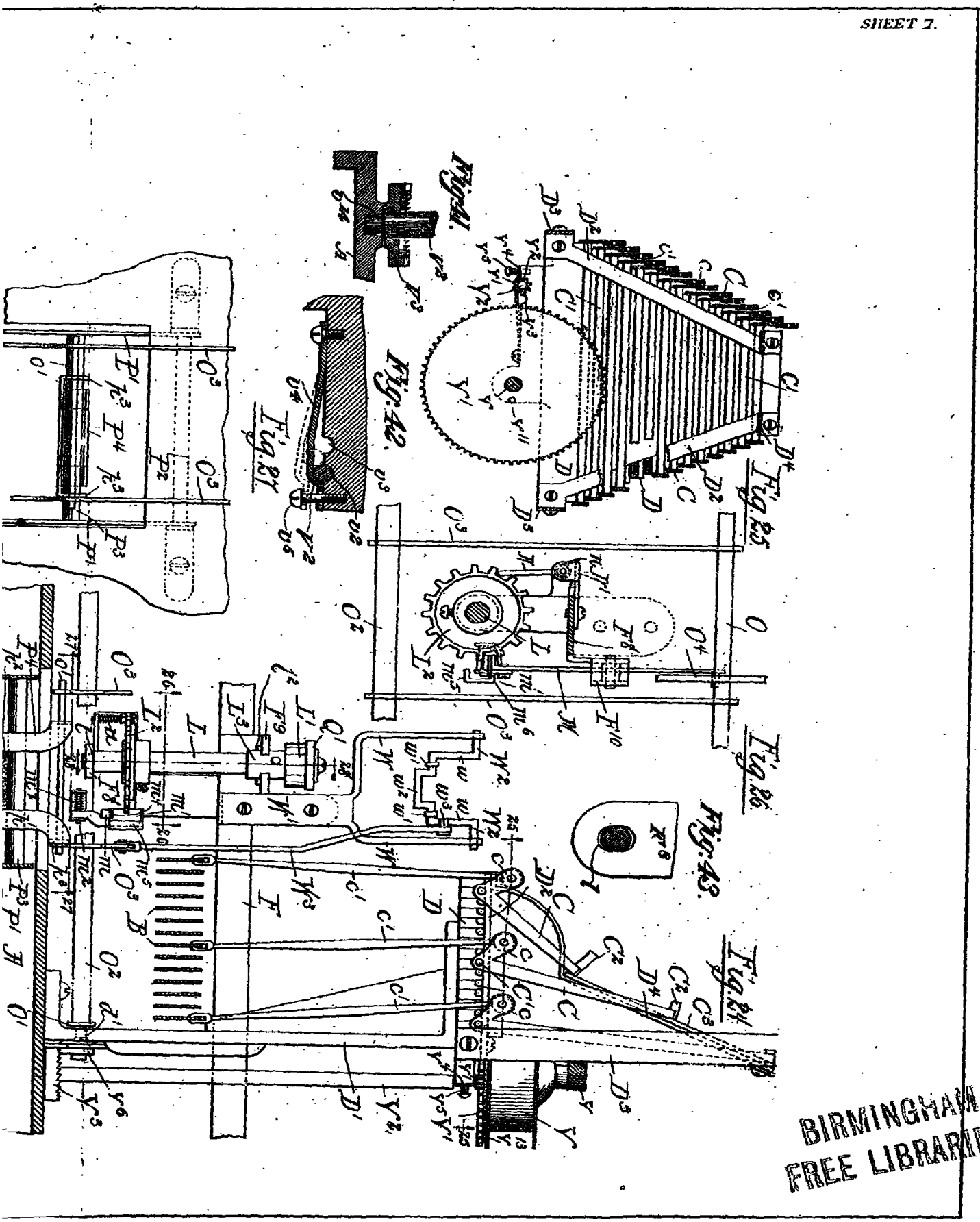

[This Drawing is a reproduction of the Original on a reduced scale.]

and Son Ld.
1896.

Malby & Sons, Photo-Litho.